SANT®
VALVES
SINCE 1953

Bronze, Brass, Cast Iron & Steel Valves

Catalogue

INTEGRATING, INNOVATING & PIONEERING FLUIDS SINCE 1953

I.B.R

ISO 9001 CERTIFIED COMPANY

For Guaranteed
Trouble-Free Service

SANT VALVES
SINCE 1953

ISO 9001 CERTIFIED COMPANY

CS-1 Cast Steel Globe Valve PN 40 (IBR Approved)

Product Description

HSN 84818030

Product : ‘SANT’ Cast Steel Globe Valve
Product Standard : BS 5160
Pressure / Class / Rating : PN 40
Body Material cum Standard : CCS (ASTM A216 Gr.WCB)
Description : Bolted Bonnet, OS & Yoke Type, Rising Stem
Type of Seat : Renewable seat
Type of Disc : Renewable disc
Trim : SS AISI-410
Gland Packing : Expanded Pure Flexible Graphite
Ends : Flanges as per BS 4504 Part-1 / DIN 2545 RF undrilled

Testing & Certification

Body Test Pressure : 76 Bar g (1100 Psig) Hyd.
Seat & Back Seat Test Pressure : 40 Bar g (580 Psig) Hyd.
Maximum Working Temperature: 400ºC

Test Certificate in Form lll-C as per IBR is furnished with every supply.

Application

Water	Oil	Steam

Materials of Construction

Components	Materials	Specifications
Body, Bonnet, Gland Flange	Cast Carbon Steel	ASTM A216 Gr.WCB
Body Seat Ring, Valve Disc, Disc Stem Nut, Backseat Bush, Stem, Gland	Stainless Steel	AISI-410
Yoke Bush	Al – Bronze / S.S.	AISI-410
Gasket	Compressed Asbestos Fiber	—
Gland Packing	Expanded Pure Flexible Graphite	—
Handwheel	S.G. Iron	—
Fasteners	Mild Steel	—

Dimensions (in mm)

Nominal Size	Nominal Size (Inches)	F	H (Approx)	W
15	1/2	130±2	200	125
20	3/4	150±2	205	125
25	1	160±2	240	160
32	1.1/4	180±2	245	160
40	1.1/2	200±2	285	200
50	2	230±2	290	200
65	2.1/2	290±2	350	250
80	3	310±2	365	250
100	4	350±2	415	315
125	5	400±3	440	315
150	6	480±3	565	400
200	8	600±3	640	400
250	10	730±4	710	450
300	12	850±5	755	600

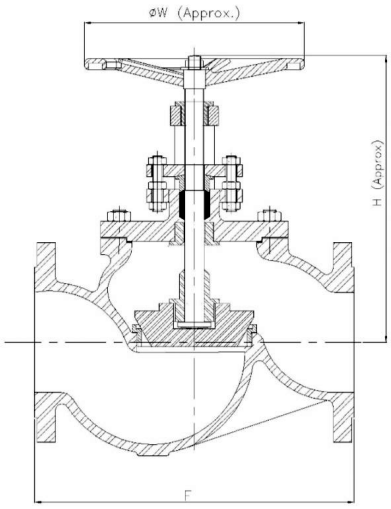

Notes
1. Product images are for illustration purposes only. Actual product may vary.

Sant Valves Pvt. Ltd.
G.T.Road Bye Pass,
Jalandhar – 144012. Punjab. INDIA
https://www.santvalves.com
Phone : +91 181 5084693
Fax: +91 181 5062270
Email : info@santvalves.com

SANT VALVES
SINCE 1953

ISO 9001 CERTIFIED COMPANY

CS-2 Cast Steel Horizontal Check Valve PN 40 (IBR Approved)

Product Description

HSN 84813000

Product : ‘SANT’ Cast Steel Horizontal Check Valve
Product Standard : BS 5160
Pressure / Class / Rating : PN 40
Body Material cum Standard : CCS (ASTM A216 Gr.WCB)
Description : Bolted Bonnet
Type of Seat : Renewable seat
Type of Disc : Renewable disc
Trim : SS AISI-410
End Details : Flanges as per BS 4504 Part-1 / DIN 2545 RF undrilled

Testing & Certification

Body Test Pressure : 76 Bar g (1100 Psig) Hyd.
Seat Test Pressure : 40 Bar g (580 Psig) Hyd.
Maximum Working Temperature: 400ºC

Test Certificate in Form III-C as per IBR is furnished with every supply.

Application

Water	Steam

Materials of Construction

Components	Materials	Specifications
Body, Cover	Cast Carbon Steel	ASTM A216 Gr.WCB
Body Seat Ring, Valve Disc	Stainless Steel	AISI-410
Gasket	Compressed Asbestos Fibre	IS:2712 Gr.C
Fasteners	Mild Steel	—

Dimensions (in mm)

Nominal Size	Nominal Size (Inches)	F	H
15	1/2	130±2	85
20	3/4	150±2	85
25	1	160±2	85
32	1.1/4	180±2	85
40	1.1/2	200±2	110
50	2	230±2	125
65	2.1/2	290±2	140
80	3	310±2	150
100	4	350±2	165
125	5	400±3	185
150	6	480±3	270
200	8	600±3	280
250	10	730±4	300
300	12	850±5	385

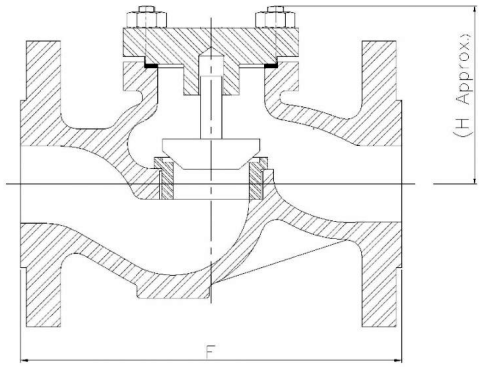

Notes
1. Product images are for illustration purposes only. Actual product may vary.
2. Actual dimensions may change over time, due to continual design improvements. Please confirm before placing order.

Sant Valves Pvt. Ltd.
G.T.Road Bye Pass,
Jalandhar – 144012. Punjab. INDIA
https://www.santvalves.com
Phone : +91 181 5084693
Fax: +91 181 5062270
Email : info@santvalves.com

SANT VALVES
SINCE 1953

ISO 9001 CERTIFIED COMPANY

CS-3A Y Type Strainer Flanged, Class-150

Product Description

HSN 84818030

Product : Sant Cast Steel Y Type Strainer
Type of Pattern : Y Type
Body Material cum standard : CCS (ASTM A-216 Gr. WCB)
Product Description : Bolted Cover 'Y' Type
Trim : AISI-304, Screen 1.2mm dia perforation
End Details : Flanges as per BS10 Table F/Class-150

Testing & Certification

Body Test Pressure : 40kg/cm² Hyd.
Maximum Working Pressure : 20kg/cm²
Maximum Working Temperature : 400ºC

Our Works' Test Certificate is furnished with every supply.

Materials of Construction

Components	Materials	Specifications
Body, Cover	C.C.S.	ASTM A216 Gr. WCB
Drain Plug	S.S.	AISI-410
Strainer (1.2mm dia perforation)	S.S.	AISI-304
Gasket	Compressed Asbestos Fiber	—
Fasteners	Mild Steel	—

Dimensions (in mm)

Nominal Size	Nominal Size (Inches)	F	H (Approx.)
40	1.1/2	165±2	145
50	2	185±2	155
65	2.1/2	206±2	185
80	3	255±2	210
100	4	295±2	255
150	6	385±2	300
200	8	475±3	375

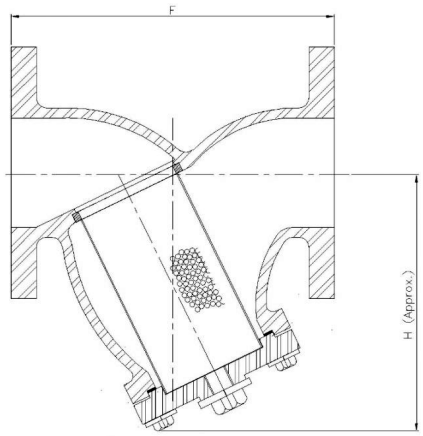

Notes
1. Product images are for illustration purposes only. Actual product may vary.
2. Actual dimensions may change over time, due to continual design improvements. Please confirm before placing order.

Sant Valves Pvt. Ltd.
G.T.Road Bye Pass,
Jalandhar – 144012. Punjab. INDIA
https://www.santvalves.com
Phone : +91 181 5084693
Fax: +91 181 5062270
Email : info@santvalves.com

SANT VALVES
SINCE 1953

ISO 9001 CERTIFIED COMPANY

CS-3 Cast Steel Y-Type Strainer Flanged (IBR Approved)

Product Description

HSN 84818030

Product : 'SANT' Cast Steel Y-Type Strainer
Type of Pattern : Y-Type
Body Material cum Standard : CCS (ASTM A216 Gr.WCB)
Description : Y-Type Bolted Cover
Trim : SS AISI-304 Screen having 1.2 dia perforation
End Details : Flanges as per BS 10 Table J FF Undrilled

Testing & Certification

Body Test Pressure : 700 Psig Hyd.
Working Pressure : Max. BOP 350 Psig.
Maximum Working Temperature: 400ºC

Test Certificate in Form lll-C as per IBR is furnished with every supply.

Application

Water	Oil	Steam

Materials of Construction

Components	Materials	Specifications
Body, Bonnet	Cast Carbon Steel	ASTM A216 Gr.WCB
Drain Plug	Stainless Steel	AISI-410
Strainer	Stainless Steel	AISI-304
Gasket	Compressed Asbestos Fibre	IS:2712 Gr.C
Fasteners	Mild Steel	—

Dimensions (in mm)

Nominal Size	Nominal Size (Inches)	F	H (approx.)		
25	1	181±1	125		
40	1 1/2	260±2	160		
50	2	277±2	205		
65	2 1/2	277±2	243		
80	3	296±2	275		
100	4	403±3	315		
125	5	429±3	400		
150	6	476±3	425		
200	8	670±4	540		

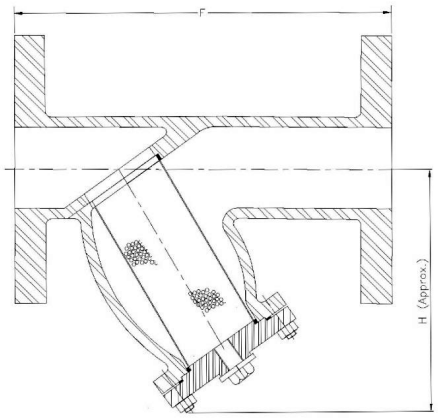

Notes
1. Product images are for illustration purposes only. Actual product may vary.
2. Actual dimensions may change over time, due to continual design improvements. Please confirm before placing order.

Sant Valves Pvt. Ltd.
G.T.Road Bye Pass,
Jalandhar – 144012. Punjab. INDIA
https://www.santvalves.com
Phone : +91 181 5084693
Fax: +91 181 5062270
Email : info@santvalves.com

SANT VALVES
SINCE 1953

I.B.R | ISI | UL LISTED | FM APPROVED

ISO 9001 CERTIFIED COMPANY

CS-4 Cast Steel Parallel Slide Blow off Valve Flanged (IBR Approved)

Product Description

HSN 84818030

Product : 'SANT' Cast Steel Parallel Slide Blow off Valve
Body Material cum Standard : CCS (ASTM A216 Gr.WCB)
Description : Rack and Pinion operated with key
Type of Seat : Renewable seat
Type of Disc : Renewable disc
Gland Packing : Expanded Pure Flexible Graphite
Trim : SS AISI-410 / Monel
End Details : Flanges as per BS 10 Table J FF Undrilled

Testing & Certification

Body Test Pressure : 700 Psig Hyd.
Seat Test Pressure : 350 Psig Hyd.
Working Pressure : Max. BOP 350 Psig. (24.61Kg/cm²)
Maximum Working Temperature: 400ºC

Test Certificate in Form lll-C as per IBR is furnished with every supply.

Application

Water	Steam

Materials of Construction

Components	Materials	Specifications
Body, Bonnet	Cast Carbon Steel	ASTM A216 Gr.WCB
Stuffing Box, Gland, Rack and Pinion	Bronze / S.S.	IBR 282(a)(iv) Gr.B / AISI-410
Body Seat Ring, Valve Disc	Cast Monel / S.S.	Ni-Cu Alloy / AISI-410
Spring	Spring Steel	IBR 307 to 314
Gasket	Compressed Asbestos Fibre	IS:2712 Gr.C
Gland Packing	Expanded Pure Flexible Graphite	—
Operating Key & Fasteners	Mild Steel	—

Dimensions (in mm)

Nominal Size	Nominal Size (Inches)	F±2	A	B			
25	1	178	138	14.5			
32	1.1/4	242	145	16			
40	1.1/2	267	171	16			
50	2	305	187	19			
65	2.1/2	330	208	22			

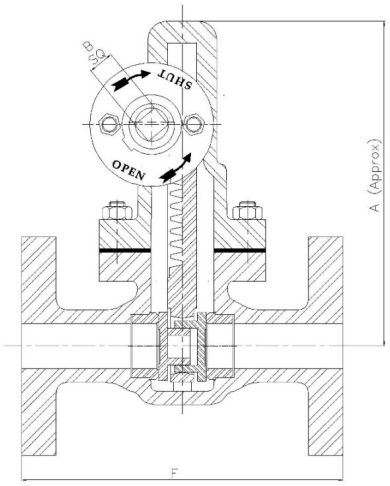

Notes
1. Product images are for illustration purposes only. Actual product may vary.

Sant Valves Pvt. Ltd.
G.T.Road Bye Pass,
Jalandhar – 144012. Punjab. INDIA
https://www.santvalves.com
Phone : +91 181 5084693
Fax: +91 181 5062270
Email : info@santvalves.com

SANT VALVES
SINCE 1953

ISO 9001 CERTIFIED COMPANY

CS-5 Cast Steel Accessible Feed Check Valve Flanged (IBR Approved)

Product Description

HSN 84813000

Product : ‘SANT’ Cast Steel Accessible Feed Check Valve
Type Of Pattern : Right Angle
Body Material cum Standard : CCS (ASTM A216 Gr.WCB)
Description : Bolted Bonnet, Outside Screw & Yoke Type, Rising Stem
Type of Seat : Renewable seat
Type of Disc : Renewable disc
Trim : SS AISI-410
Yoke Bush : Aluminum Bronze
Gland Packing : Expanded Pure Flexible Graphite
End Details : Flanges as per BS 10 Table J FF Undrilled

Testing & Certification

Body Test Pressure : 700 Psig Hyd.
Seat & Back Seat Test Pressure : 350 Psig Hyd.
Working Pressure : Max. BOP 350 Psig. (24.61Kg/cm²)
Maximum Working Temperature: 400ºC

Test Certificate in Form III-C as per IBR is furnished with every supply.

Application

Water	Steam

Materials of Construction

Components	Materials	Specifications
Body, Bonnet & Gland Flange	Cast Carbon Steel	ASTM A216 Gr.WCB
Body Seat Ring, Valve Disc	S.S.	AISI-410
Spindle, Backseat Bush	S.S.	AISI-410
Check Nut & Gland	Stainless Steel	AISI-410
Disc Guide	Bronze	IBR 282(a)(iv) Gr.B
Gasket	Compressed Asbestos Fibre	IS:2712 Gr.C
Gland Packing	Expanded Pure Flexible Graphite	—
Handwheel	S.G. Iron	
Fasteners	Mild Steel	—
Yoke Bush	Aluminum Bronze	—

Dimensions (in mm)

Nominal Size	Nominal Size (Inches)	A±2	B±2	H Approx	W		
40	1.1/2	195	140	260	200		
50	2	216	152	280	200		
65	2.1/2	238	178	310	250		
80	3	264	203	340	250		

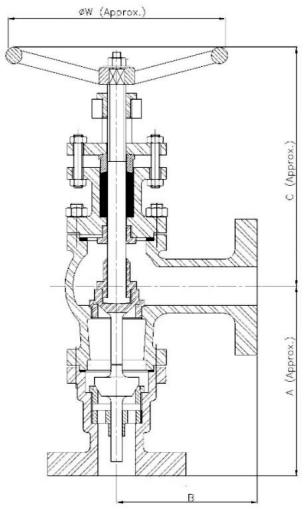

Sant Valves Pvt. Ltd.
G.T.Road Bye Pass,
Jalandhar – 144012. Punjab. INDIA

https://www.santvalves.com

Phone : +91 181 5084693
Fax: +91 181 5062270
Email : info@santvalves.com

SANT VALVES
SINCE 1953

ISO 9001 CERTIFIED COMPANY

CS-6 Cast Steel Sleeve Packed Water Level Gauge Flanged (IBR Approved)

Product Description

HSN 84818030

Product : ‘SANT’ Cast Steel Sleeve Packed Water Level Gauge
Body Material cum Standard : CCS (ASTM A216 Gr.WCB)
Description : With automatic shut off device in the water arm Right Hand / Left Hand Type
Trim : Stem SS AISI-410, Ball AISI-304
End Details : Flanges as per BS 10 Table J FF Undrilled

Testing & Certification

Body Test Pressure : 700 Psig Hyd.
Seat Test Pressure : 350 Psig Hyd.
Working Pressure : Max. BOP 350 Psig. (24.61Kg/cm²)
Maximum Working Temperature: 400ºC

Test Certificate in Form lll-C as per IBR is furnished with every supply.

Application

Steam

Materials of Construction

Components	Materials	Specifications
Body, Bonnet & Back Nuts	Cast Steel	ASTM A216 Gr.WCB
Sleeve	Moulded Asbestos	—
Spindle & Cover Nuts	Stainless Steel	AISI-410
Handles	S.G. Iron	—
Name Plate	Brass Sheet	—
Rubber Cones	Rubber	—
Fasteners	Mild Steel	BS:916

Dimensions (in mm)

Nominal Size	Nominal Size (Inches)		A (Inches)	B (Inches)			
15	1/2		3 3/4	3/4			
20	3/4		3 3/4	1			

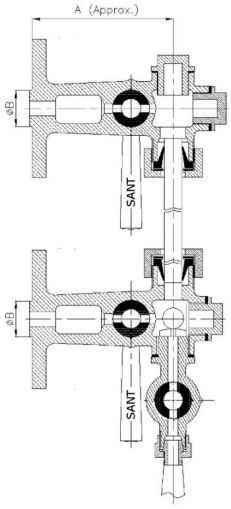

Notes
1. Product images are for illustration purposes only. Actual product may vary.

Sant Valves Pvt. Ltd.
G.T.Road Bye Pass,
Jalandhar – 144012. Punjab. INDIA
https://www.santvalves.com
Phone : +91 181 5084693
Fax: +91 181 5062270
Email : info@santvalves.com

SANT VALVES
SINCE 1953

ISO 9001 CERTIFIED COMPANY

CS-7A Cast Steel Gate Valve Flanged, Class-300 (IBR Approved)

Product Description

HSN 84818030

Product : ‘SANT’ Cast Steel Gate Valve
Product Standard : BS 1414 / API 600
Pressure / Class / Rating : Class 300
Body Material cum Standard : CCS (ASTM A216 Gr.WCB)
Description : Bolted Bonnet, Outside Screw & Yoke Type, Rising Stem
Type of Seat : Renewable seat
Type of Disc : Renewable disc
Trim : Stem SS AISI-410
Yoke Sleeve : Aluminum Bronze
Gland Packing : Expanded Pure Flexible Graphite
End Details : Flanges as per ANSI B 16.5 Class 300 R.F. Undrilled

Testing & Certification

Body Test Pressure : 76 Bar g (1110 Psig) Hyd.
Seat Test Pressure : 56 Bar g (815 Psig) Hyd. & 6.9 Bar g (100 Psig) Air
Tested as per API 598 / ANSI B16.34 / BS : 6755 Part 1
Maximum Working Temperature: 425ºC

Test Certificate in Form III-C as per IBR is furnished with every supply.

Application

Water	Oil	Steam

Materials of Construction

Components	Materials	Specifications
Body, Bonnet, Yoke, Gland Flange	Cast Carbon Steel	ASTM A216 Gr.WCB
Wedge (for 2” or less)	Stainless Steel	AISI-410 / CA15
Wedge (above 2”)	Cast Carbon Steel with SS Weld Deposit	ASTM A216 Gr.WCB / AISI-410
Gasket	Spiral Wound S.S.	AISI-304
Gland Packing	Expanded Pure Flexible Graphite	—
Handwheel	S.G. Iron	—
Body Rings, Gland Yoke Follower, Sleeve Nut, Stem, Backseat Bush, Locking Screws	Stainless Steel	AISI-410
Gland Bolting	Carbon Steel	—
Bolts	Alloy Steel	ASTM A193 Gr.B7
Nuts	HT Steel	ASTM A194 Gr.2H
Yoke Sleeve	Al Bronze	—

Dimensions (in mm)

Nominal Size	Nominal Size (Inches)	F±2	H (Approx.)	ØW (Approx.)
40	1.1/2	191	340	178
50	2	216	355	178
65	2.1/2	241	390	210
80	3	283	435	254
100	4	305	520	254
125	5	381	605	305
150	6	403	710	400
200	8	419	855	450
250	10	457	1020	450

Sant Valves Pvt. Ltd.
G.T.Road Bye Pass,
Jalandhar – 144012. Punjab. INDIA
https://www.santvalves.com
Phone : +91 181 5084693
Fax: +91 181 5062270
Email : info@santvalves.com

SANT VALVES
SINCE 1953

ISO 9001 CERTIFIED COMPANY

Nominal Size	Nominal Size (Inches)	F±2	H (Approx.)	ØW (Approx.)
300	12	502	1215	500

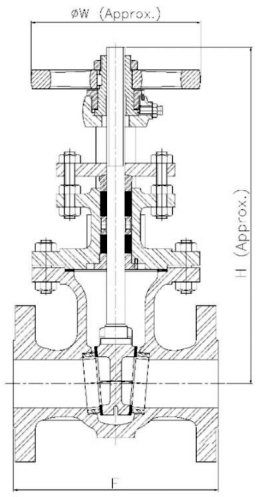

Notes
1. Product images are for illustration purposes only. Actual product may vary.
2. Actual dimensions may change over time, due to continual design improvements. Please confirm before placing order.

Sant Valves Pvt. Ltd.
G.T.Road Bye Pass,
Jalandhar – 144012. Punjab. INDIA
https://www.santvalves.com
Phone : +91 181 5084693
Fax: +91 181 5062270
Email : info@santvalves.com

SANT VALVES
SINCE 1953

ISO 9001 CERTIFIED COMPANY

CS-7B Cast Steel Gate Valve Flanged, Class-600

Product Description

HSN 84818030

Product : Sant Cast Steel Gate Valve
Product Standard : Conforming to BS-1414/API 600
Type of Pattern : Straight Type
Pressure / Class Rating : Class 600
Body Material cum standard : CCS (ASTM A-216 Gr. WCB)
Product Description : Bolted Bonnet O/S Yoke Type Rising Stem
Type of Seat : Renewable
Type of Wedge : Solid/Flexible Wedge
Trim : SS AISI-410 & Aluminium Bronze Sleeves
End Details : Flanges as per ASME B 16.5 Class 600 RF Undrilled

Testing & Certification

Body Test Pressure : 153 Barg (2220 Psig.) Hyd.
Seat Test Pressure : 112 Barg (1630 Psig.) Hyd.
Seat Test Pressure : 6.9barg 100 Psig. (AIR)

Our Works' Test Certificate is furnished with every supply.

Materials of Construction

Components	Materials	Specifications
Body, Bonnet, Yoke, Gland Flange	Cast Carbon Steel	ASTM A216 Gr.WCB
Wedge	Cast Carbon Steel with SS Weld Deposit	ASTM A216 Gr.WCB / AISI-410
Gasket	Spiral Wound S.S.	AISI-304
Gland Packing	Expanded Pure Flexible Graphite	—
Handwheel	S.G. Iron	—
Body Rings, Gland Yoke Follower, Sleeve Nut, Stem, Backseat Bush, Locking Screws	Stainless Steel	AISI-410
Gland Bolting	Carbon Steel	—
Bolts	Alloy Steel	ASTM A193 Gr.B7
Nuts	HT Steel	ASTM A194 Gr.2H
Yoke Sleeve	Al Bronze	—

Dimensions (in mm)

Nominal Size	Nominal Size (Inches)	F±2	H (Approx.)	ØW (Approx.)
40	1.1/2	241	350	229
50	2	292	400	229
65	2.1/2	330	425	229
80	3	356	465	254
100	4	432	560	305
125	5	508	665	405
150	6	559	760	450
200	8	660	925	500

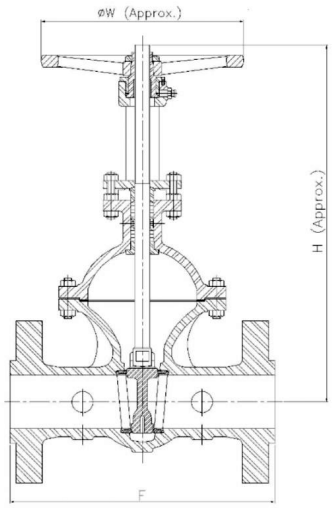

Sant Valves Pvt. Ltd.
G.T.Road Bye Pass,
Jalandhar – 144012. Punjab. INDIA

https://www.santvalves.com

Phone : +91 181 5084693
Fax: +91 181 5062270
Email : info@santvalves.com

SANT VALVES
SINCE 1953

I.B.R ISI UL LISTED FM APPROVED

ISO 9001 CERTIFIED COMPANY

CS-7 Cast Steel Gate Valve Flanged, Class-150 (IBR Approved)

Product Description

HSN 84818030

Product : ‘SANT’ Cast Steel Gate Valve
Product Standard : BS 1414 / API 600
Pressure / Class / Rating : Class 150
Body Material cum Standard : CCS (ASTM A216 Gr.WCB)
Description : Bolted Bonnet, Outside Screw & Yoke Type, Rising Stem
Type of Seat : Renewable seat
Type of Disc : Renewable disc
Trim : Stem SS AISI-410
Yoke Sleeve : Aluminum Bronze
Gland Packing : Expanded Pure Flexible Graphite
End Details : Flanges as per ANSI B 16.5 Class 150 R.F. Undrilled

Testing & Certification

Body Test Pressure : 30 Bar g (435 Psig) Hyd.
Seat Test Pressure : 22 Bar g (320 Psig) Hyd. & 6.9 Bar g (100 Psig) Air
Tested as per API 598 / ANSI B16.34 / BS : 6755 Part 1
Maximum Working Temperature: 400ºC

Test Certificate in Form III-C as per IBR is furnished with every supply.

Application

Water	Oil	Steam

Materials of Construction

Components	Materials	Specifications
Body, Bonnet, Yoke, Gland Flange	Cast Carbon Steel	ASTM A216 Gr.WCB
Wedge (upto 8″)	Stainless Steel	AISI-410 / CA15
Wedge (for 10″ & 12″)	Cast Carbon Steel with SS Weld Deposit	ASTM A216 Gr.WCB / AISI-410
Gasket	CAF	BS:1832
Gland Packing	Expanded Pure Flexible Graphite	—
Handwheel	S.G. Iron	—
Body Rings, Gland Yoke Follower, Sleeve Nut, Stem, Backseat Bush, Locking Screws	Stainless Steel	AISI-410
Gland Bolting	Carbon Steel	—
Bolts	Alloy Steel	ASTM A193 Gr.B7
Nuts	HT Steel	ASTM A194 Gr.2H
Yoke Sleeve	Al Bronze	—

Dimensions (in mm)

Nominal Size	Nominal Size (Inches)	F±2	C (Approx)	ØW			
25	1	127	260	127			
40	1.1/2	165	290	178			
50	2	178	315	178			
65	2.1/2	191	355	178			
80	3	203	400	210			
100	4	229	475	254			
125	5	254	560	305			
150	6	267	635	305			
200	8	292	810	400			

Sant Valves Pvt. Ltd.
G.T.Road Bye Pass,
Jalandhar – 144012. Punjab. INDIA
https://www.santvalves.com
Phone : +91 181 5084693
Fax: +91 181 5062270
Email : info@santvalves.com

SANT VALVES
SINCE 1953

ISO 9001 CERTIFIED COMPANY

Nominal Size	Nominal Size (Inches)	F±2	C (Approx)	ØW			
250	10	330	925	450			
300	12	356	1060	500			

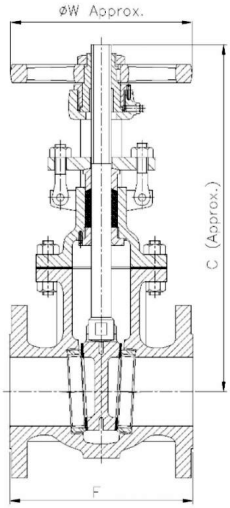

Notes
1. Product images are for illustration purposes only. Actual product may vary.
2. Actual dimensions may change over time, due to continual design improvements. Please confirm before placing order.

Sant Valves Pvt. Ltd.
G.T.Road Bye Pass,
Jalandhar – 144012. Punjab. INDIA
https://www.santvalves.com
Phone : +91 181 5084693
Fax: +91 181 5062270
Email : info@santvalves.com

SANT VALVES
SINCE 1953

ISO 9001 CERTIFIED COMPANY

CS-8A Cast Steel Horizontal Check Valve Flanged, Class-300

Product Description

HSN 84813000

Product : Sant Cast Steel Swing Check Valve
Product Standard : Conforming to BS 1868/ANSI B 16.34
Body Material cum standard : CCS (ASTM A-216 Gr. WCB)
Product Description : Bolted Cover
Type of Seat : Renewable Seat
Type of Disc : Renewable Disc
Hinge Pin : AISI 410 Stainless Steel
End Details : Flanges as per ASME B 16.5 Class-300 R.F. Undrilled

Testing & Certification

Body Test Pressure : 76barg Hyd. (435Psig.)
Seat Test Pressure : 56barg Hyd. (320Psig.)

Our Works' Test Certificate is furnished with every supply.

Materials of Construction

Components	Materials	Specifications
Body, Cover	C.C.S.	ASTM A216 Gr. WCB
Studs & Nuts	Alloy Steel & H.T Steel	ASTM A193 Gr. B7 & ASTM A194 Gr. 2H
Disc	S.S.	ASTM A276 Type 410
Gasket	Spiral Wound S.S 304 With Asbestos Filler	—
Body Seat Ring	S.S. /F.S.S	ASTM A276 Type 410/ ASTM A182 Gr. F6a

Dimensions (in mm)

Nominal Size	Nominal Size (Inches)	F±2	H
25	1	203	95
32	1.1/4	216	100
40	1.1/2	229	110
50	2	267	120
65	2.1/2	292	176
80	3	318	185
100	4	356	215
150	6	445	246
200	8	559	265
250	10	622	340
300	12	711	395

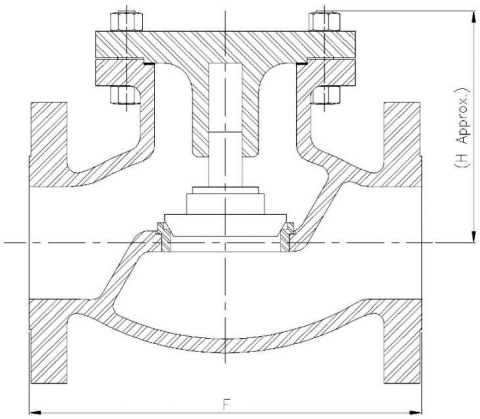

Notes
1. Product images are for illustration purposes only. Actual product may vary.
2. Actual dimensions may change over time, due to continual design improvements. Please confirm before placing order.

Sant Valves Pvt. Ltd.
G.T.Road Bye Pass,
Jalandhar – 144012. Punjab. INDIA
https://www.santvalves.com
Phone : +91 181 5084693
Fax: +91 181 5062270
Email : info@santvalves.com

SANT VALVES
SINCE 1953

I.B.R LISTED FM APPROVED

ISO 9001 CERTIFIED COMPANY

CS-8 Cast Steel Swing Check Valve Flanged, Class-150 (IBR Approved)

Product Description

HSN 84813000

Product : 'SANT' Cast Steel Swing Check Valve
Product Standard : BS 1868 / ANSI B16.34
Pressure / Class / Rating : Class-150
Body Material cum Standard : CCS (ASTM A216 Gr.WCB)
Description : Bolted Cover
Type of Seat : Renewable seat
Type of Disc : Renewable disc
Hinge Pin : SS AISI-410
End Details : Flanges as per ANSI B 16.5 Class 150 R.F. Undrilled

Testing & Certification

Body Test Pressure : 30 Bar g Hyd. (435 Psig)
Seat Test Pressure : 22 Bar g Hyd. (320 Psig)
Seat is also tested at low pressure of 25% of the above test
Tested as per API 598 / ANSI B16.34 / BS : 6755 Part 1
Max Working Temperature: 400ºC

Test Certificate in Form lll-C as per IBR is furnished with every supply.

Application

Water	Oil	Steam

Materials of Construction

Components	Materials	Specifications
Body, Cover, Valve Disc	Cast Carbon Steel	ASTM A216 Gr.WCB
Gasket	CAF	BS:1832
Body Rings, Disc Seat, Pin & Side Plugs	Stainless Steel	AISI-410
Bolts	Alloy Steel	ASTM A193 Gr.B7
Nuts	HT Steel	ASTM A194 Gr.2H
Lever	M.I. / S.G. Iron	—

Dimensions (in mm)

Nominal Size	Nominal Size (Inches)	F	H (Approx)			
25	1	127±2	115			
40	1.1/2	165±2	130			
50	2	203±2	145			
65	2.1/2	216±2	155			
80	3	241±2	175			
100	4	292±2	200			
125	5	330±2	210			
150	6	356±2	240			
200	8	495±3	275			

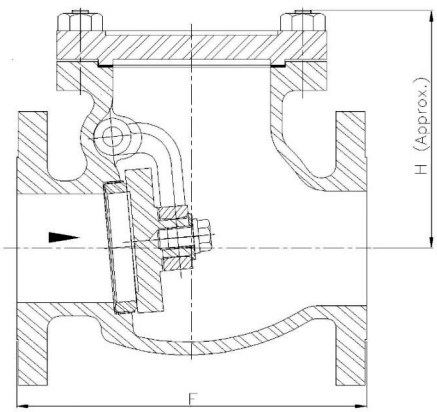

Notes
1. Product images are for illustration purposes only. Actual product may vary.
2. Actual dimensions may change over time, due to continual design improvements. Please confirm before placing order.

Sant Valves Pvt. Ltd.
G.T.Road Bye Pass,
Jalandhar – 144012. Punjab. INDIA
https://www.santvalves.com
Phone : +91 181 5084693
Fax: +91 181 5062270
Email : info@santvalves.com

SANT VALVES
SINCE 1953

I.B.R | ISI | UL LISTED | FM APPROVED

ISO 9001 CERTIFIED COMPANY

CS-9 Cast Steel Globe Valve Flanged, Class-150 (IBR Approved)

Product Description

HSN 84818030

Product : 'SANT' Cast Steel Globe Valve
Product Standard : BS 1873
Pressure / Class / Rating : Class 150
Body Material cum Standard : CCS (ASTM A216 Gr.WCB)
Description : Bolted Cover, Outside Screw & Yoke Type, Rising Stem
Type of Seat : Renewable seat
Type of Disc : Renewable disc
Trim : Stem SS AISI-410
Yoke Bush : Aluminum Bronze
Gland Packing : Expanded Pure Flexible Graphite
End Details : Flanges as per ANSI B 16.5 Class 150 R.F. Undrilled

Testing & Certification

Body Test Pressure : 30 Bar g (435 Psig) Hyd.
Seat Test Pressure : 22 Bar g (320 Psig) Hyd. & 6.9 Bar g (100 Psig) Air
Tested as per API 598 / ANSI B16.34 / BS : 6755 Part 1
Maximum Working Temperature: 400ºC

Test Certificate in Form III-C as per IBR is furnished with every supply.

Application

Water	Oil	Steam

Materials of Construction

Components	Materials	Specifications
Body, Bonnet, Gland Flange	Cast Carbon Steel	ASTM A216 Gr.WCB
Gasket	CAF	—
Gland Packing	Expanded Pure Flexible Graphite	—
Handwheel	S.G. Iron	—
Body Rings, Gland Follower, Stem, Locking Screws	Stainless Steel	AISI-410
Gland Bolting	Carbon Steel	—
Bolts	Alloy Steel	ASTM A193 Gr.B7
Nuts	HT Steel	ASTM A194 Gr.2H
Yoke Bush	Al Bronze	—

Dimensions (in mm)

Nominal Size	Nominal Size (Inches)	F	H (Approx)	W			
25	1	127	255	125			
32	1.1/4	140	265	125			
40	1.1/2	165	270	160			
	2	203	290	160			
65	2.1/2	211	355	200			
80	3	241	380	200			
100	4	292	420	250			
150	6	406	515	315			
200	8	495	610	400			
250	10	622	620	450			
300	12	698	720	500			

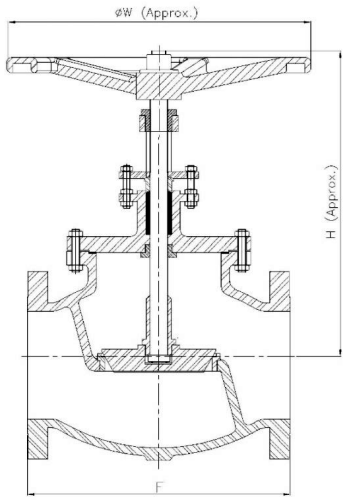

Sant Valves Pvt. Ltd.
G.T.Road Bye Pass,
Jalandhar – 144012. Punjab. INDIA

https://www.santvalves.com

Phone : +91 181 5084693
Fax: +91 181 5062270
Email : info@santvalves.com

SANT VALVES
SINCE 1953

ISO 9001 CERTIFIED COMPANY

CS-10A Cast Steel Globe Valve Flanged, Class-600

Product Description

HSN 84818030

Product : Sant Cast Steel Globe Valve
Product Standard : BS 1873
Pressure / Class Rating : Class 600
Body Material cum standard : CCS (ASTM A-216 Gr. WCB)
Product Description : Bolted Bonnet O/S Yoke Type Rising Stem
Type of Seat : Renewable
Type of Disc : Renewable Disc
Trim : SS AISI-410
End Details : Flanges as per ASME B 16.5 Class 600 RF Undrilled

Testing & Certification

Body Test Pressure : 153 Barg (2220 Psig.) Hyd.
Seat Test Pressure : 112 Barg (1630 Psig.) Hyd. 6.9barg
100 Psig. (AIR)

Our Works' Test Certificate is furnished with every supply.

Materials of Construction

Components	Materials	Specifications
Body, Bonnet, Disc, Gland Flange	C.C.S.	ASTM A216 Gr. WCB
Stem, Back Seat Bush, Body Seat Ring, Valve Disc Ring, Gland Follower, Lantern Ring & Thrust Plate	Stainless Steel	AISI-410
Gasket	Spiral Wound S.S. 304 with Graphite Filler	—
Gland Packing	Expanded Pure Flexible Graphite	—
Fasteners	Mild Steel	—
Yoke Bush	Aluminum Bronze	—
Handwheel	S.G. Iron	—

Dimensions (in mm)

Nominal Size	Nominal Size (Inches)	F±2	H (Approx.)	ØW (Approx.)
40	1.1/2	242	305	200
50	2	292	360	254
65	2.1/2	330	405	305
80	3	356	450	305
100	4	432	525	450
150	6	559	670	560
200	8	660	740	600

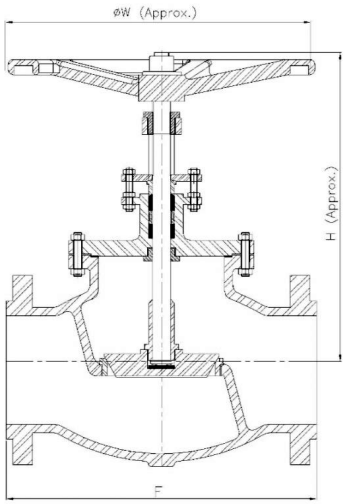

Notes
1. Product images are for illustration purposes only. Actual product may vary.

Sant Valves Pvt. Ltd.
G.T.Road Bye Pass,
Jalandhar – 144012. Punjab. INDIA
https://www.santvalves.com
Phone : +91 181 5084693
Fax: +91 181 5062270
Email : info@santvalves.com

SANT VALVES
SINCE 1953

ISO 9001 CERTIFIED COMPANY

CS-10 Cast Steel Globe Valve Flanged, Class-300 (IBR Approved)

Product Description

HSN 84818030

Product : ‘SANT’ Cast Steel Globe Valve
Product Standard : BS 1873
Pressure / Class / Rating : Class-300
Body Material cum Standard : CCS (ASTM A216 Gr.WCB)
Description : Bolted Cover, Outside Screw & Yoke Type, Rising Stem
Type of Seat : Renewable seat
Type of Disc : Renewable disc
Trim : Stem SS AISI-410
Yoke Bush : Aluminum Bronze
Gland Packing : Expanded Pure Flexible Graphite
End Details : Flanges as per ANSI B 16.5 Class 300 R.F. Undrilled

Testing & Certification

Body Test Pressure : 76 Bar g (1102 Psig) Hyd.
Seat Test Pressure : 56 Bar g (815 Psig) Hyd. & 6.9 Bar g (100 Psig) Air
Tested as per API 598 / ANSI B16.34 / BS : 6755 Part 1
Maximum Working Temperature: 425ºC

Test Certificate in Form III-C as per IBR is furnished with every supply.

Application

Water	Oil	Steam

Materials of Construction

Components	Materials	Specifications
Body, Bonnet, Gland Flange	Cast Carbon Steel	ASTM A216 Gr.WCB
Body Ring, Valve Disc, Gland Follower, Back Seat Bush, Stem, Locking Screws, Lantern Ring	Stainless Steel	AISI-410
Gasket	Spiral Wound S.S.	AISI-304
Gland Packing	Expanded Pure Flexible Graphite	—
Handwheel	S.G. Iron	—
Gland Bolting	Carbon Steel	—
Bolts	Alloy Steel	ASTM A193 Gr.B7
Nuts	HT Steel	ASTM A194 Gr.2H
Yoke Bush	Al Bronze	—

Dimensions (in mm)

Nominal Size	Nominal Size (Inches)	F	H (Approx)	W						
25	1	203±2	280	160						
32	1.1/4	216±2	280	160						
40	1.1/2	229±2	325	200						
50	2	267±2	335	200						
65	2.1/2	292±2	400	250						
80	3	318±2	410	250						
100	4	356±2	500	315						
150	6	445±2	585	400						
200	8	559±2	680	400						
250	10	622±3	720	560						
300	12	711±3	800	610						

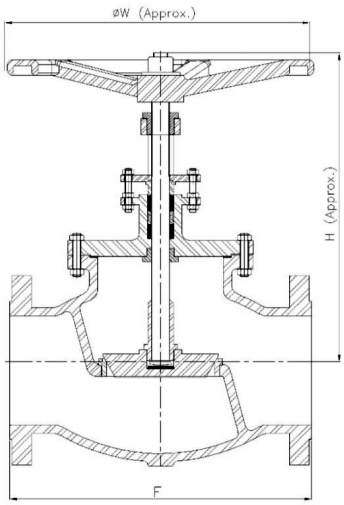

Sant Valves Pvt. Ltd.
G.T.Road Bye Pass,
Jalandhar – 144012. Punjab. INDIA

https://www.santvalves.com

Phone : +91 181 5084693
Fax: +91 181 5062270
Email : info@santvalves.com

SANT VALVES
SINCE 1953

ISO 9001 CERTIFIED COMPANY

CS-11 Cast Steel Ball Valve Flanged (IBR Approved)

Product Description

HSN 84818030

Product : ‘SANT’ Cast Steel Ball Valve
Product Standard : BS 5351 / API 6D
Type of Pattern : Straight Type
Pressure / Class / Rating : Class 150
Body Material cum Standard : CCS (ASTM A216 Gr.WCB)
Description : Three Piece Design, Lever Operated
Type of Seat : Renewable seat
Trim : Stem S.S. ASTM A276 Type 410
Ball : SS (ASTM A351 Gr. CF8 / AISI-304) Seat Ring & Gland Packing PTFE
End Details : Flanges as per ANSI B 16.5 Class 150 R.F. Undrilled

Testing & Certification

Body Test Pressure : 30 Bar g (435 Psig) Hyd.
Seat Test Pressure : 22 Bar g (320 Psig) Hyd. & 6.9 Bar g (100 Psig) Air
Maximum Working Temperature : 250°C

Test Certificate in Form lll-C as per IBR is furnished with every supply.

Application

Water	Oil	Gas	Steam

Materials of Construction

Components	Materials	Specifications
Lever	Steel	with PVC Sleeve
Stem, Nut, Gland	13% Cr. S.S	AISI-410
Stopper	Steel	—
Packing Ring, Seat	PTFE / RPTFE	—
Studs & Nuts	Alloy Steel & H.T. Steel	ASTM A193 Gr.B7 & ASTM A194 Gr.2H
Ball	Stainless Steel	CF8 / AISI-304
Body, Body Connector	C.S.	ASTM A216 Gr.WCB
Gasket	CAF	BS:1832

Dimensions (in mm)

Nominal Size	Nominal Size (Inches)	F	H (Approx)	LL (Approx)			
25	1	127±2	80	165			
32	1.1/4	140±2	95	205			
40	1.1/2	165±2	100	220			
50	2	178±2	106	220			
65	2.1/2	191±2	145	350			
80	3	203±2	155	400			
100	4	229±2	175	450			

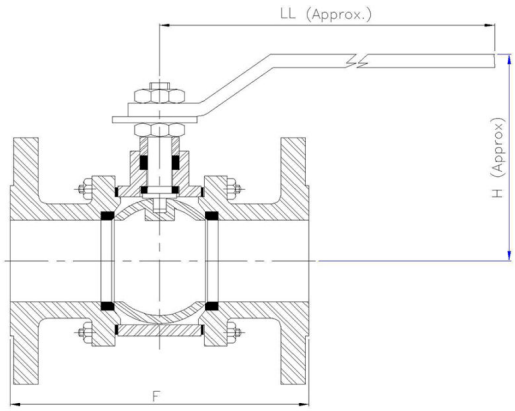

Notes
1. Product images are for illustration purposes only. Actual product may vary.

Sant Valves Pvt. Ltd.
G.T.Road Bye Pass,
Jalandhar – 144012. Punjab. INDIA
https://www.santvalves.com
Phone : +91 181 5084693
Fax: +91 181 5062270
Email : info@santvalves.com

SANT VALVES
SINCE 1953

I.B.R LISTED FM APPROVED

ISO 9001 CERTIFIED COMPANY

CS-12 Cast Steel Single Post Full Lift Safety Valve Flanged

Product Description

HSN 84818030

Product : Sant Cast Steel Single Post Full Lift Safety Valve
Type of Pattern : Right Angle
Body Material cum standard : CCS (ASTM A-216 Gr. WCB)
Product Description : Spring Loaded Full Lift
Type of Seat : Renewable Seat
Type of Disc : Renewable Disc
Trim : SS to AISI-304
End Details : Inlet Flanges to BS 10 Table-H
Outlet Flanges to BS 10 Table-E

Testing & Certification

Body Test Pressure : 53kg/cm²g Hyd.
Maximum Working Pressure : 26.5kg/cm²g
Maximum Working Temperature : 425°C

Our Works' Test Certificate is furnished with every supply.

Materials of Construction

Components	Materials	Specifications
Nozzle, Disc, Ball Retainer, Disc Retainer, Ball, Stem	S.S.	AISI-304
Screw, Guide, Regulating ring, Locking Nut, Adjusting Screw, Fork Retainer	S.S	AISI-410
Body, Bonnet	C.S	IBR 73 to 80
Gasket	CAF	—
Fork, Lever, Cap,	S.G Iron	—
Fasteners	Mild Steel	—

Dimensions (in mm)

Nominal Size	Nominal Size (Inches)	L	L1	H (Approx.)
25 x 50	1 x 2	115±2	105±2	345
32 x 50	1 1/4 x 2	121±2	124±2	355
40 x 50	1 1/2 x 2	121±2	124±2	465
40 x 80	1 1/2 x 3	124±2	130±2	465
50 x 80	2 x 3	124±2	138±2	470
80 x 100	3 x 4	162±2	160±2	525

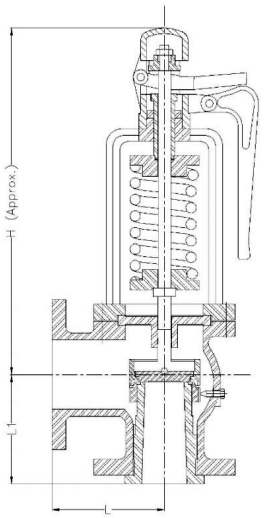

Notes
1. Product images are for illustration purposes only. Actual product may vary.
2. Actual dimensions may change over time, due to continual design improvements. Please confirm before placing order.

Sant Valves Pvt. Ltd.
G.T.Road Bye Pass,
Jalandhar – 144012. Punjab. INDIA
https://www.santvalves.com
Phone : +91 181 5084693
Fax: +91 181 5062270
Email : info@santvalves.com

SANT VALVES
SINCE 1953

ISO 9001 CERTIFIED COMPANY

CS-13 Cast Steel Moisture Separator Flanged

Product Description

HSN 84818030

Product : Sant Cast Steel Moisture Separator
Body Material cum standard : CCS (ASTM A-216 Gr. WCB)
Product Description :
End Details : Flanges as per BS10 Table F

Testing & Certification

Body Test Pressure : 40kg/cm² Hyd.
Maximum Working Temperature : 20kg/cm²

Our Works' Test Certificate is furnished with every supply.

Materials of Construction

Components	Materials	Specifications
Body	C.C.S.	ASTM A216 Gr. WCB
Gasket	Compressed Asbestos Fiber	—
Drain Plug	S.S.	AISI-410

Dimensions (in mm)

Nominal Size	Nominal Size (Inches)	F	
25	1	300±2	
40	1.1/2	370±2	
50	2	466±2	
65	2.1/2	485±2	
80	3	485±2	
100	4	696±2	

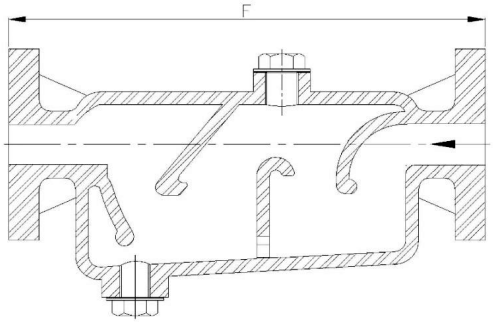

Notes
1. Product images are for illustration purposes only. Actual product may vary.
2. Actual dimensions may change over time, due to continual design improvements. Please confirm before placing order.

Sant Valves Pvt. Ltd.
G.T.Road Bye Pass,
Jalandhar – 144012. Punjab. INDIA

https://www.santvalves.com

Phone : +91 181 5084693
Fax: +91 181 5062270
Email : info@santvalves.com

SANT VALVES
SINCE 1953

ISO 9001 CERTIFIED COMPANY

CSPVF Cast Steel Piston Valve Flanged, Class-150

Product Description

HSN 84818090

Product : Sant Cast Steel Piston Valve
Pressure/Class /Rating : Class-150
Body Material Cum Standard : C.C.S. (ASTM A-216 Gr. WCB)
Product Description : Bolted Bonnet O.S. Yoke Type Rising Stem
Type of Seat : Renewable
Type of Wedge : Piston Type
Trim : AISI-410
End Details : Flanges as per ASME B 16.5 Class-150

Testing & Certification

Body Test Pressure : 30 Barg (435Psig.) Hyd.
Seat Test Pressure : 22 Barg (350Psig.) Hyd.

Materials of Construction

Components	Materials	Specifications
Wheel	CI	–
Bush	Cu	–
Bonnet	ASTM A216 GR WCB	–
Stem	AISI-1045	–
Nut	AISI-1045	–
Studs	AISI-1045	–
Piston	AISI-420	–
Seal	GRAPHITE	–
Piston Guide	ASTM A216 GR WCB	–
Body	ASTM A216 GR WCB	–

Dimensions (in mm)

Size	F	D	d	C
25	127	110	50.8	14.2
40	165	125	73	17.5
50	203	150	92	19.1
80	241	190	127	23.9
100	292	230	157	23.9

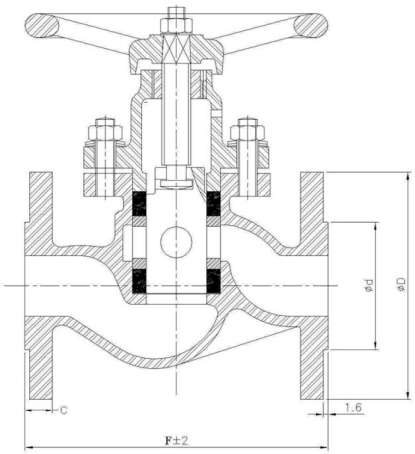

Sant Valves Pvt. Ltd.
G.T.Road Bye Pass,
Jalandhar – 144012. Punjab. INDIA

https://www.santvalves.com

Phone : +91 181 5084693
Fax: +91 181 5062270
Email : info@santvalves.com

SANT VALVES
SINCE 1953

ISO 9001 CERTIFIED COMPANY

WCB Cast Steel Ball Valve

Product Description

Product : ‘SANT’ Cast Steel Ball Valve
Pressure Temperature Rating : 69 Barg at 30°C, 5 Bar at 225°C
Body Material cum Standard : CCS (ASTM A 216 Gr. WCB)
Description : Three piece design, Lever Operated
Type of Seat : Renewable PTFE with Carbon Filled
Trim : Stem: SS AISI-410, Ball: SS AISI-304/ CF8
Gland Packing : PTFE
End Details : Screwed female BSP Taper threads

Testing & Certification

Body Test Pressure : 104 Barg Hyd.
Seat Test Pressure : 76 Barg Hyd.

Our Works’ Test Certificate is furnished with every supply.

Materials of Construction

P.No.	Components	Materials	No.	Specifications
1	Body	1	C.C.S	ASTMA 216 Gr WCB
2	Connector	2	C.C.S	ASTMA 216 Gr WCB
3	Seat	2	Carbon Filled PTFE	–
4	Ball	1	SS	AISI-304
5	Stem	1	SS	AISI-410
6	Gland Seal	To Suit	Carbon Filled PTFE	–
7	Gland	1	SS	AISI-410
8	Lever	1	Carbon Steel	GALVANISED, PVC SLEEVE
9	Bolt & Nuts	To Suit	SS	–

Dimensions (in mm)

Nominal Size	Nominal Size (Inches)	F	LL (Approx.)
15	1/2	70±2	105
20	3/4	80±2	105
25	1	88±2	125
32	1.1/4	102±2	145
40	1.1/2	110±2	156
50	2	132±2	156

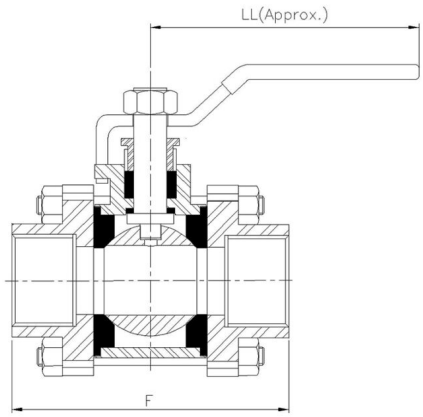

Notes
1. Product images are for illustration purposes only. Actual product may vary.

Sant Valves Pvt. Ltd.
G.T.Road Bye Pass,
Jalandhar – 144012. Punjab. INDIA
https://www.santvalves.com
Phone : +91 181 5084693
Fax: +91 181 5062270
Email : info@santvalves.com

SANT VALVES
SINCE 1953

I.B.R ISI UL LISTED FM APPROVED

ISO 9001 CERTIFIED COMPANY

FSV-1A Forged Steel Gate Valve Reduced Bore, Class 800, Screwed Ends (IBR Approved)

Product Description

HSN 84818030

Product : 'SANT' Forged Steel Gate Valve
Product Standard : BS 5352 / API 602
Pressure / Class / Rating : Class 800
Type of Pattern : Straight Type
Body Material cum Standard : FCS (A105)
Description : Bolted Bonnet, Outside Screw & Yoke Type, Rising Stem
Type of Seat : Renewable Seat
Type of Disc : Renewable Disc
Trim : SS AISI-410
Gland Packing : Expanded Pure Flexible Graphite
Fastener & Gasket : Alloy Steel (Gr.B7/2H) Spiral Wound SS 304 (CAF/Graphite filled)
End Details : Screwed Female NPT Threads

Testing & Certification

Body Test Pressure : 207 Bar g (3000 Psig) Hyd.
Seat Test Pressure : 152 Bar g (2200 Psig) Hyd. & 6.9 Bar g (100 Psig) Air
Maximum Working Temperature : 425°c

Test Certificate in Form III-C as per IBR is furnished with every supply

Application

Water	Oil	Steam

Materials of Construction

Components	Materials	Specifications
Body, Bonnet, Gland Flange	Drop Forged C.Steel	ASTM A105
Body Seat Ring, Wedge, Gland, Stem, Gland Eye Bolts,Yoke Sleeve	Stainless Steel	AISI-410
Gland Packing	Expanded Pure Flexible Graphite	—
Gasket	Spiral Wound SS (AISI-304) Asbestos Filled / Graphite Filled	—
Handwheel	Malleable Iron / D.I.	IS:14329
Studs / Bolts	Alloy Steel	ASTM A193 Gr.B7
Nuts	High Tensile Steel	ASTM A194 Gr.2H
Gland Nuts, Screw, Wheel Nuts & Washer	Mild Steel	—

Dimensions (in mm)

Nominal Size	Nominal Size (Inches)	F	H (Approx)	W (Approx)
10	3/8	73±2	131	86
15	1/2	73±2	135	86
20	3/4	80±2	137	86
25	1	100±2	162	116
40	1.1/2	120±2	201	150
50	2	130±2	223	150

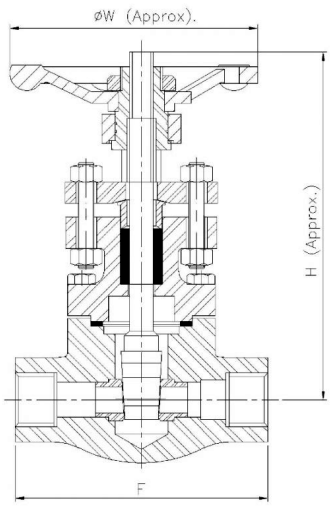

Sant Valves Pvt. Ltd.
G.T.Road Bye Pass,
Jalandhar – 144012. Punjab. INDIA

https://www.santvalves.com

Phone : +91 181 5084693
Fax: +91 181 5062270
Email : info@santvalves.com

SANT VALVES
SINCE 1953

I.B.R | ISI | UL LISTED | FM APPROVED

ISO 9001 CERTIFIED COMPANY

FSV-1B Forged Steel Gate Valve Reduced Bore, Class 800, Socket Welded Ends (IBR Approved)

Product Description

HSN 84818030

Product : 'SANT' Forged Steel Gate Valve
Product Standard : BS 5352 / API 602
Pressure / Class / Rating : Class 800
Type of Pattern : Straight Type
Body Material cum Standard : FCS (A105)
Description : Bolted Bonnet, Outside Screw & Yoke Type, Rising Stem
Type of Seat : Renewable Seat
Type of Disc : Renewable Disc
Trim : SS AISI-410
Gland Packing : Expanded Pure Flexible Graphite
Fastener & Gasket : Alloy Steel (Gr.B7/2H) Spiral Wound SS 304 (CAF/Graphite filled)
End Details : Socket Welded Ends as per ASME B-16.11

Testing & Certification

Body Test Pressure : 207 Bar g (3000 Psig) Hyd.
Seat Test Pressure : 152 Bar g (2200 Psig) Hyd. & 6.9 Bar g (100 Psig) Air
Maximum Working Temperature : 425°c

Test Certificate in Form III-C as per IBR is furnished with every supply

Application

Water	Oil	Steam

Materials of Construction

Components	Materials	Specifications
Body, Bonnet, Gland Flange	Drop Forged C.Steel	ASTM A105
Body Seat Ring, Wedge, Gland, Stem, Gland Eye Bolts,Yoke Sleeve	Stainless Steel	AISI-410
Gland Packing	Expanded Pure Flexible Graphite	—
Gasket	Spiral Wound SS (AISI-304) Asbestos Filled / Graphite Filled	—
Handwheel	Malleable Iron / D.I.	IS:14329
Studs / Bolts	Alloy Steel	ASTM A193 Gr.B7
Nuts	High Tensile Steel	ASTM A194 Gr.2H
Gland Nuts, Screw, Wheel Nuts & Washer	Mild Steel	—

Dimensions (in mm)

Nominal Size	Nominal Size (Inches)	F	H (Approx)	W (Approx)	A (Min.)	B (Min.)	B (Max.)
10	3/8	73±2	130	86	10	17.6	18
15	1/2	73±2	135	86	10	21.8	22.2
20	3/4	80±2	137	86	13	27.1	27.5
25	1	100±2	162	116	13	33.8	34.2
40	1.1/2	120±2	201	150	13	48.6	49.1
50	2	130±2	223	150	16	61.1	61.6

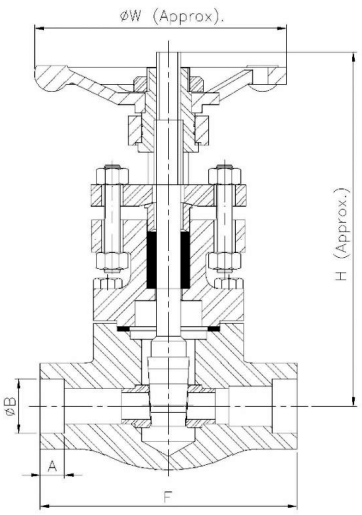

Sant Valves Pvt. Ltd.
G.T.Road Bye Pass,
Jalandhar – 144012. Punjab. INDIA

https://www.santvalves.com

Phone : +91 181 5084693
Fax: +91 181 5062270
Email : info@santvalves.com

SANT VALVES
SINCE 1953

I.B.R | ISI | UL LISTED | FM APPROVED

ISO 9001 CERTIFIED COMPANY

FSV-2A Forged Steel Globe Valve Reduced Bore, Class 800, Screwed Ends (IBR Approved)

Product Description

HSN 84818030

Product : 'SANT' Forged Steel Globe Valve
Product Standard : BS 5352 / API 602
Pressure / Class / Rating : Class 800
Body Material cum Standard : FCS (A105)
Description : Bolted Bonnet, Outside Screw & Yoke Type, Rising Stem
Type of Seat : Renewable Seat
Type of Disc : Renewable Disc
Trim : SS AISI-410
Gland Packing : Expanded Pure Flexible Graphite
Fastener & Gasket : Alloy Steel (Gr.B7/2H) Spiral Wound SS 304 (CAF/Graphite filled)
End Details : Screwed Female NPT Threads

Testing & Certification

Body Test Pressure : 207 Bar g (3000 Psig) Hyd.
Seat Test Pressure : 152 Bar g (2200 Psig) Hyd. & 6.9 Bar g (100 Psig) Air
Maximum Working Temperature : 425°c

Test Certificate in Form III-C as per IBR is furnished with every supply

Application

Water	Oil	Steam

Materials of Construction

Components	Materials	Specifications
Body, Bonnet, Gland Flange	Drop Forged C.Steel	ASTM A105
Body Seat Ring, Disc, Gland, Stem, Gland Eye Bolts, Yoke Bush	Stainless Steel	AISI-410
Gland Packing	Expanded Pure Flexible Graphite	—
Gasket	Spiral Wound SS (AISI-304) Asbestos Filled / Graphite Filled	—
Handwheel	Malleable Iron / D.I.	IS:14329
Studs / Bolts	Alloy Steel	ASTM A193 Gr.B7
Nuts	High Tensile Steel	ASTM A194 Gr.2H
Gland Nuts, Screw, Wheel Nuts & Washer	Mild Steel	—

Dimensions (in mm)

Nominal Size	Nominal Size (Inches)	F	H (Approx)	W (Approx)
10	3/8	73±2	143	80
15	1/2	73±2	143	86
20	3/4	80±2	146	86
25	1	100±2	171	116
40	1.1/2	145±2	199	150
50	2	160±2	236	150

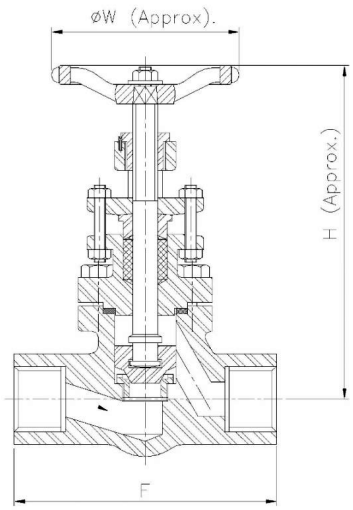

Sant Valves Pvt. Ltd.
G.T.Road Bye Pass,
Jalandhar – 144012. Punjab. INDIA

https://www.santvalves.com

Phone : +91 181 5084693
Fax: +91 181 5062270
Email : info@santvalves.com

SANT VALVES
SINCE 1953

I.B.R ISI UL LISTED FM APPROVED

ISO 9001 CERTIFIED COMPANY

FSV-2B Forged Steel Globe Valve Reduced Bore, Class 800, Socket Welded Ends (IBR Approved)

Product Description

HSN 84818030

Product : 'SANT' Forged Steel Globe Valve
Product Standard : BS 5352 / API 602
Pressure / Class / Rating : Class 800
Body Material cum Standard : FCS (A105)
Description : Bolted Bonnet, Outside Screw & Yoke Type, Rising Stem
Type of Seat : Renewable Seat
Type of Disc : Renewable Disc
Trim : SS AISI-410
Gland Packing : Expanded Pure Flexible Graphite
Fastener & Gasket : Alloy Steel (Gr.B7/2H) Spiral Wound SS 304 (CAF/Graphite filled)
End Details : Socket Welded Ends as per ASME B-16.11

Testing & Certification

Body Test Pressure : 207 Bar g (3000 Psig) Hyd.
Seat Test Pressure : 152 Bar g (2200 Psig) Hyd. & 6.9 Bar g (100 Psig) Air
Maximum Working Temperature : 425°c

Test Certificate in Form III-C as per IBR is furnished with every supply

Application

Water	Oil	Steam

Materials of Construction

Components	Materials	Specifications
Body, Bonnet, Gland Flange	Drop Forged C. Steel	ASTM A105
Body Seat Ring, Disc, Gland, Stem, Gland Eye Bolts, Yoke Bush	Stainless Steel	AISI-410
Gland Packing	Expanded Pure Flexible Graphite	—
Gasket	Spiral Wound SS (AISI-304) Asbestos Filled / Graphite Filled	—
Handwheel	Malleable Iron / D.I.	IS:14329
Studs / Bolts	Alloy Steel	ASTM A193 Gr.B7
Nuts	High Tensile Steel	ASTM A194 Gr.2H
Gland Nuts, Screw, Wheel Nuts & Washer	Mild Steel	—

Dimensions (in mm)

Nominal Size	Nominal Size (Inches)	F	H(Approx)	W(Approx)	A (Min.)	B (Min.)	B (Max.)
10	3/8	73±2	143	86	10	17.6	18
15	1/2	73±2	143	86	10	21.8	22.2
20	3/4	80±2	146	86	13	27.1	27.5
25	1	100±2	171	116	13	33.8	34.2
40	1.1/2	145±2	199	150	13	48.6	49.1
50	2	160±2	236	150	16	61.1	61.6

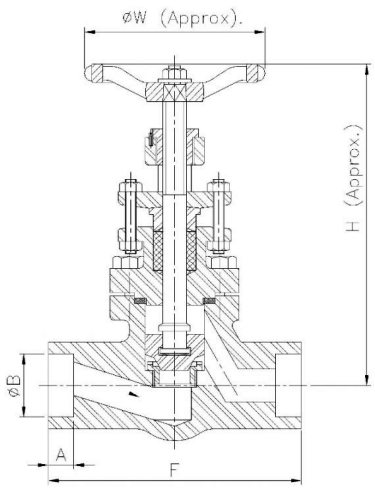

Sant Valves Pvt. Ltd.
G.T.Road Bye Pass,
Jalandhar – 144012. Punjab. INDIA

https://www.santvalves.com

Phone : +91 181 5084693
Fax: +91 181 5062270
Email : info@santvalves.com

SANT VALVES
SINCE 1953

I.B.R LISTED FM APPROVED

ISO 9001 CERTIFIED COMPANY

FSV-3A Forged Steel Horizontal Lift Check Valve Reduced Bore, Class 800, Screwed Ends (IBR Approved)

Product Description

HSN 84813000

Product : 'SANT' Forged Steel Horizontal Lift Check Valve
Product Standard : BS 5352 / API 602
Pressure / Class / Rating : Class 800
Body Material cum Standard : FCS (A105)
Description : Bolted Bonnet
Type of Seat : Renewable Seat
Type of Disc : Renewable Disc
Trim : SS AISI-410
Fastener : Alloy Steel (Gr.B7/2H)
Gasket : Spiral Wound SS-304 (CAF/Graphite filled)
End Details : Screwed Female NPT Threads

Testing & Certification

Body Test Pressure : 207 Bar g (3000 Psig) Hyd.
Seat Test Pressure : 152 Bar g (2200 Psig) Hyd. & 6.9 Bar g (100 Psig) Air
Maximum Working Temperature : 425°c

Test Certificate in Form III-C as per IBR is furnished with every supply

Application

Water	Oil	Steam

Materials of Construction

Components	Materials	Specifications
Body, Bonnet	Drop Forged C.Steel	ASTM A105
Body Seat Ring, Valve Disc	Stainless Steel	AISI-410
Gasket	Spiral Wound SS (AISI-304) Asbestos Filled / Graphite Filled	—
Studs / Bolts	Alloy Steel	ASTM A193 Gr.B7
Nuts	High Tensile Steel	ASTM A194 Gr.2H

Dimensions (in mm)

Nominal Size	Nominal Size (Inches)	F	H (Approx)
10	3/8	73±2	53
15	1/2	73±2	53
20	3/4	80±2	55
25	1	100±2	66
40	1.1/2	145±2	86
50	2	160±2	104

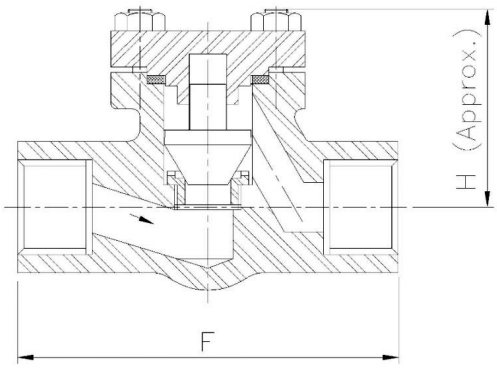

Notes
1. Product images are for illustration purposes only. Actual product may vary.
2. Actual dimensions may change over time, due to continual design improvements. Please confirm before placing order.

Sant Valves Pvt. Ltd.
G.T.Road Bye Pass,
Jalandhar – 144012. Punjab. INDIA
https://www.santvalves.com
Phone : +91 181 5084693
Fax: +91 181 5062270
Email : info@santvalves.com

SANT VALVES
SINCE 1953

I.B.R LISTED FM APPROVED

ISO 9001 CERTIFIED COMPANY

FSV-3B Forged Steel Horizontal Lift Check Valve Reduced Bore, Class 800, Socket Welded Ends (IBR Approved)

Product Description

HSN 84813000

Product : 'SANT' Forged Steel Horizontal Lift Check Valve
Product Standard : BS 5352 / API 602
Pressure / Class / Rating : Class 800
Body Material cum Standard : FCS (A105)
Description : Bolted Bonnet
Type of Seat : Renewable Sat
Type of Disc : Renewable Disc
Trim : SS AISI-410
Fastener : Alloy Steel (Gr.B7/2H)
Gasket : Spiral Wound SS-304 (CAF/Graphite filled)
End Details : Socket Welded Ends as per ASME B-16.11

Testing & Certification

Body Test Pressure : 207 Bar g (3000 Psig) Hyd.
Seat Test Pressure : 152 Bar g (2200 Psig) Hyd. & 6.9 Bar g (100 Psig) Air
Maximum Working Temperature : 425°c

Test Certificate in Form III-C as per IBR is furnished with every supply

Application

Water	Oil	Steam

Materials of Construction

Components	Materials	Specifications
Body, Bonnet	Drop Forged C.Steel	ASTM A105
Body Seat Ring, Valve Disc	Stainless Steel	AISI-410
Gasket	Spiral Wound SS (AISI-304) Asbestos Filled / Graphite Filled	—
Studs / Bolts	Alloy Steel	ASTM A193 Gr.B7
Nuts	High Tensile Steel	ASTM A194 Gr.2H

Dimensions (in mm)

Nominal Size	Nominal Size (Inches)	F	H (Approx)	A (Min.)	B (Min.)	B (Max.)
10	3/8	73±2	53	10	17.6	18
15	1/2	73±2	53	10	21.8	22.2
20	3/4	80±2	55	13	27.1	27.5
25	1	100±2	66	13	33.8	34.2
40	1.1/2	145±2	86	13	48.6	49.1
50	2	160±2	104	16	61.1	61.6

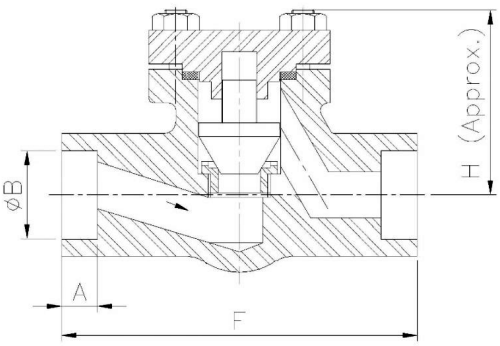

Notes
1. Product images are for illustration purposes only. Actual product may vary.
2. Actual dimensions may change over time, due to continual design improvements. Please confirm before placing order.

Sant Valves Pvt. Ltd.
G.T.Road Bye Pass,
Jalandhar – 144012. Punjab. INDIA

https://www.santvalves.com

Phone : +91 181 5084693
Fax: +91 181 5062270
Email : info@santvalves.com

SANT VALVES
SINCE 1953

I.B.R LISTED FM APPROVED

ISO 9001 CERTIFIED COMPANY

FSV-4A Forged S.S. Thermodynamic Steam Trap Screwed Ends (IBR Approved)

Product Description

HSN 84818030

Product : 'SANT' Forged S.S.Thermodynamic Steam Trap
Body Material cum Standard : FSS (AISI-410)
Description : Thermodynamic Type with inbuilt strainer
Trim : SS AISI-410
End Details : Screwed Female BSP Taper Threads to BS 21

Testing & Certification

Body Test Pressure : 900 Psig Hyd.
Working Pressure : Max. BOP 450 Psig. (31.65Kg/cm²)
Maximum Working Temperature : 400°c

Test Certificate in Form III-C as per IBR is furnished with every supply

Application

Steam

Materials of Construction

Components	Materials	Specifications
Body	Forged Stainless Steel	AISI-410
Cover, Disc	Stainless Steel	AISI-410
Strainer	Stainless Steel	AISI-304 / AISI-410
Name Plate	Aluminium Sheet	IS:2676

Dimensions (in mm)

Nominal Size	Nominal Size (Inches)	F	H
15	1/2	78±1.5	60
20	3/4	78±1.5	60
25	1	96±1.5	71

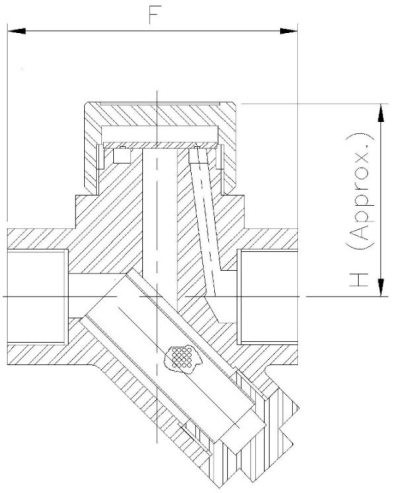

Notes
1. Product images are for illustration purposes only. Actual product may vary.
2. Actual dimensions may change over time, due to continual design improvements. Please confirm before placing order.

Sant Valves Pvt. Ltd.
G.T.Road Bye Pass,
Jalandhar – 144012. Punjab. INDIA
https://www.santvalves.com
Phone : +91 181 5084693
Fax: +91 181 5062270
Email : info@santvalves.com

SANT VALVES
SINCE 1953

I.B.R LISTED FM APPROVED

ISO 9001 CERTIFIED COMPANY

FSV-4B Forged S.S. Thermodynamic Steam Trap Socket Welded Ends (IBR Approved)

Product Description

HSN 84818030

Product : 'SANT' Forged S.S.Thermodynamic Steam Trap
Body Material cum Standard : FSS (AISI-410)
Description : Thermodynamic Type with inbuilt strainer
Type of Seat : Renewable Seat
Type of Disc : Renewable Disc
Trim : SS AISI-410
End Details : Socket Welded Ends as per ASME B-16.11

Testing & Certification

Body Test Pressure : 900 Psig Hyd.
Working Pressure : Max. BOP 450 Psig. (31.65Kg/cm²)
Maximum Working Temperature : 400°c

Test Certificate in Form III-C as per IBR is furnished with every supply

Application

Steam

Materials of Construction

Components	Materials	Specifications
Body	Forged Stainless Steel	AISI-410
Cover, Disc	Stainless Steel	AISI-410
Strainer	Stainless Steel	AISI-304 / AISI-410
Name Plate	Aluminium Sheet	IS:2676

Dimensions (in mm)

Nominal Size	Nominal Size (Inches)	F	H(Approx.)		B (Min.)	B (Max.)	A	
15	1/2	78±1.5	60		21.8	22.2	15	
20	3/4	78±1.5	60		27.1	27.5	15	
25	1	96±1.5	71		33.8	34.2	18	

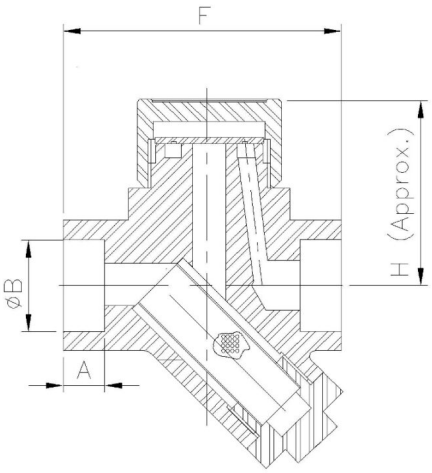

Notes
1. Product images are for illustration purposes only. Actual product may vary.
2. Actual dimensions may change over time, due to continual design improvements. Please confirm before placing order.

Sant Valves Pvt. Ltd.
G.T.Road Bye Pass,
Jalandhar – 144012. Punjab. INDIA

https://www.santvalves.com

Phone : +91 181 5084693
Fax: +91 181 5062270
Email : info@santvalves.com

SANT VALVES
SINCE 1953

I.B.R | ISI | UL LISTED | FM APPROVED

ISO 9001 CERTIFIED COMPANY

FSV-5A Forged Steel Wedge Gate Valve Screwed, Class-800

Product Description

HSN 84818030

Product : Sant Forged Steel Wedge Gate Valve
Product Standard : BS 5352/API 602
Type of Pattern : Standard Bore
Pressure/Class /Rating : Class-800
Body Material cum standard : FCS (A 105)
Product Description : Bolted Bonnet O/S & Yoke type Rising Stem
Type of Seat : Renewable Seat
Type of Disc : Solid Wedge
Trim : SS AISI-410
Fasteners : Alloy Steel (Gr. B7/2H)
Gasket : Spiral wound SS 304/(CAF/Graphite Filled)
End Details : Screwed female NPT threads

Testing & Certification

Body Test Pressure : 207 barg Hyd.(3000 Psig)
Seat Test Pressure : 152 barg (2200Psig.) Hyd. (6.9barg (100Psig.) AIR

Our Works' Test Certificate is furnished with every supply.

Materials of Construction

Components	Materials	Specifications
Body, Bonnet, Gland Flange	Forged Carbon Steel	ASTM A105
Body Seat Ring, Wedge, Gland, Stem, Yoke Sleeve	Stainless Steel	AISI-410
Gland Packing	Expanded Pure Flexible Graphite	—
Gasket	Spiral Wound SS (AISI-304) Asbestos Filled / Graphite Filled	—
Handwheel	M.I. / D.I.	IS:14329
Studs / Bolts	Alloy Steel	ASTM A193 Gr.B7
Nuts	High Tensile Steel	ASTM A194 Gr.2H
Gland Nuts, Screw, Wheel Nuts & Washer	Mild Steel	—

Dimensions (in mm)

Nominal Size	Nominal Size (Inches)	F	H (Approx)	W (Approx)
10	3/8	80±2	138	76
15	1/2	88±2	145	76
20	3/4	100±2	170	86
25	1	105±2	205	120
32	1.1/4	105±2	225	120
40	1.1/2	117±2	250	120

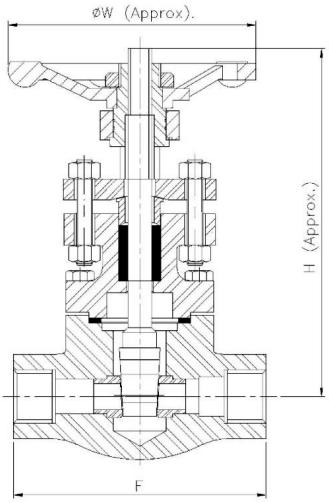

Notes

Sant Valves Pvt. Ltd.
G.T.Road Bye Pass,
Jalandhar – 144012. Punjab. INDIA

https://www.santvalves.com

Phone : +91 181 5084693
Fax: +91 181 5062270
Email : info@santvalves.com

SANT VALVES
SINCE 1953

I.B.R ISI UL LISTED FM APPROVED

ISO 9001 CERTIFIED COMPANY

FSV-5B Forged Steel Wedge Gate Valve Socket Ended, Class-800

Product Description

HSN 84818030

Product : Sant Forged Steel Wedge Gate Valve
Product Standard : BS 5352/API 602
Type of Pattern : Standard Bore
Pressure/Class /Rating : Class-800
Body Material cum standard : FCS (A 105)
Product Description : Bolted Bonnet O/S & Yoke type Rising Stem
Type of Seat : Renewable Seat
Type of Disc : Solid Wedge
Trim : SS AISI 410
Fasteners : Alloy Steel (Gr. B7/2H)
Gasket : Spiral wound SS 304/(CAF/Graphite Filled)
End Details : Socket Welded Ends as per ASME B16.11

Testing & Certification

Body Test Pressure : 207 barg (3000Psig.) Hyd.
Seat Test Pressure : 152 barg (2200Psig.) Hyd. (6.9barg (100Psig.) AIR

Our Works' Test Certificate is furnished with every supply.

Materials of Construction

Components	Materials	Specifications
Body, Bonnet, Gland Flange	Forged Carbon Steel	ASTM A105
Body Seat Ring, Wedge, Gland, Stem, Gland Eye Bolts, Yoke Sleeve	Stainless Steel	AISI-410
Gland Packing	Expanded Pure Flexible Graphite	—
Gasket	Spiral Wound SS (AISI-304) Asbestos Filled / Graphite Filled	—
Handwheel	M.I. / D.I.	IS:14329
Studs / Bolts	Alloy Steel	ASTM A193 Gr.B7
Nuts	High Tensile Steel	ASTM A194 Gr.2H
Gland Nuts, Screw, Wheel Nuts & Washer	Mild Steel	—

Dimensions (in mm)

Nominal Size	Nominal Size (Inches)	F	H (Approx)	W (Approx)	A	B
10	3/8	80±2	138	76	10	17.5
15	1/2	88±2	145	76	10	21.7
20	3/4	100±2	170	86	13	27.2
25	1	105±2	205	120	13	33.9
32	1.1/4	105±2	225	120	13	42.55
40	1.1/2	117±2	250	120	13	48.65

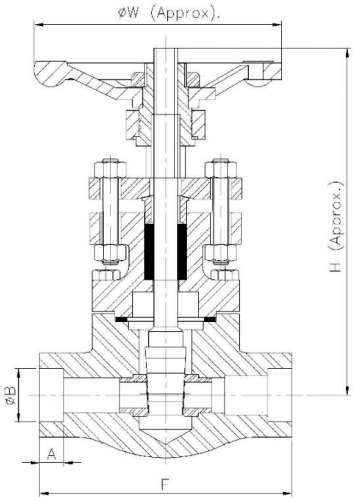

Sant Valves Pvt. Ltd.
G.T.Road Bye Pass,
Jalandhar – 144012. Punjab. INDIA

https://www.santvalves.com

Phone : +91 181 5084693
Fax: +91 181 5062270
Email : info@santvalves.com

SANT VALVES
SINCE 1953

ISO 9001 CERTIFIED COMPANY

FSV-6A Forged Steel Globe Valve Screwed, Class-800

Product Description

HSN 84818030

Product : Sant Forged Steel Globe Valve
Product Standard : conforming to BS 5352/API 602
Type of Pattern : Standard Bore
Pressure/Class /Rating : Class-800
Body Material cum standard : FCS (A 105)
Product Description : Bolted Bonnet O/S Yoke type Rising Stem
Type of Seat : Renewable Seat
Type of Disc : Renewable Disc
Trim : Type 410
Fasteners : Alloy Steel (Gr. B7/2H)
End Details : Screwed Female NPT Threads
Gaskets : Spiral wound SS 304/(CAF/Graphite Filled)

Testing & Certification

Body Test Pressure : 207 barg (3000Psig.) Hyd.
Seat Test Pressure : 152 barg(2200Psig.) Hyd. 6.9barg (100Psig.) AIR

Our Works' Test Certificate is furnished with every supply.

Dimensions (in mm)

Nominal Size	Nominal Size (Inches)	F	H	øW
15	1/2	88±2	155	76
20	3/4	100±2	185	86
25	1	130±2	230	152
32	1.1/4	147±2	250	152
40	1.1/2	171±2	280	152

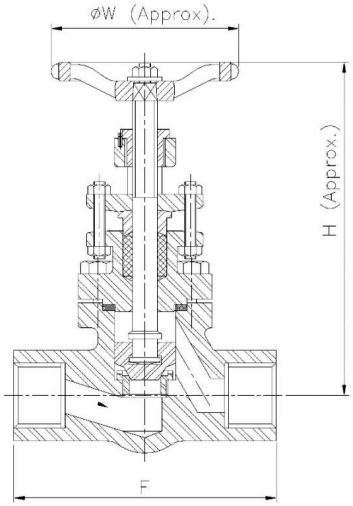

Notes
1. Product images are for illustration purposes only. Actual product may vary.
2. Actual dimensions may change over time, due to continual design improvements. Please confirm before placing order.

Sant Valves Pvt. Ltd.
G.T.Road Bye Pass,
Jalandhar – 144012. Punjab. INDIA
https://www.santvalves.com
Phone : +91 181 5084693
Fax: +91 181 5062270
Email : info@santvalves.com

SANT VALVES
SINCE 1953

ISO 9001 CERTIFIED COMPANY

FSV-6B Forged Steel Globe Valve Socket Ended, Class-800

Product Description

HSN 84818030

Product : Sant Forged Steel Globe Valve
Product Standard : conforming to BS 5352/API 602
Type of Pattern : Standard Bore
Pressure/Class /Rating : Class-800
Body Material cum standard : FCS (A 105)
Product Description : Bolted Bonnet O/S Yoke type Rising Stem
Type of Seat : Renewable Seat
Type of Disc : Renewable Disc
Trim : Type 410
Fasteners : Alloy Steel (Gr. B7/2H)
Gaskets : Spiral wound SS 304/(CAF/Graphite Filled)
End Details : Socket Welded Ends as per ASME B 16.11

Testing & Certification

Body Test Pressure : 207 barg (3000Psig.) Hyd.
Seat Test Pressure : 152 barg(2200Psig.) Hyd. 6.9barg (100Psig.) AIR

Our Works' Test Certificate is furnished with every supply.

Dimensions (in mm)

Nominal Size	Nominal Size (Inches)	F	H	øW	B	A
15	1/2	88±2	155	76	21.70	14
20	3/4	100±2	185	86	27.20	14
25	1	130±2	230	152	33.90	14
32	1.1/4	147±2	250	152	42.55	15
40	1.1/2	171±2	280	152	48.65	15

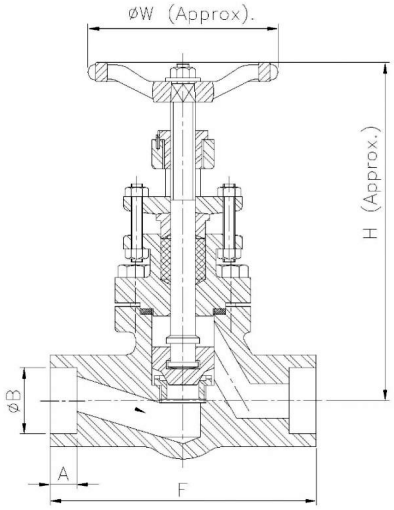

Notes
1. Product images are for illustration purposes only. Actual product may vary.
2. Actual dimensions may change over time, due to continual design improvements. Please confirm before placing order.

Sant Valves Pvt. Ltd.
G.T.Road Bye Pass,
Jalandhar – 144012. Punjab. INDIA
https://www.santvalves.com
Phone : +91 181 5084693
Fax: +91 181 5062270
Email : info@santvalves.com

SANT VALVES
SINCE 1953

ISO 9001 CERTIFIED COMPANY

FSV-7A Forged Steel Horizontal Lift Check Valve Screwed, Class-800

Product Description

HSN 84813000

Product : Sant Forged Steel Horizontal Lift Check Valve
Product Standard : BS 5352/API 602
Type of Pattern : Standard Bore
Pressure/Class /Rating : Class-800
Body Material cum standard : FCS (A 105)
Product Description : Bolted Cover
Type of Seat : Renewable Seat
Type of Disc : Renewable Disc
Trim : SS AISI 410
Fasteners : Alloy Steel (Gr. B7/2H)
End Details : Screwed Female NPT-Thread
Gasket : Spiral Wound SS 304 with CAF/Graphite Filled

Testing & Certification

Body Test Pressure : 207 barg Hyd. (3000 Psig)
Seat Test Pressure : 152 barg (2200Psig.) Hyd.

Our Works' Test Certificate is furnished with every supply.

Dimensions (in mm)

Nominal Size	Nominal Size (Inches)	F	H (Approx)
15	1/2	88±2	65
20	3/4	100±2	80
25	1	130±2	95
32	1.1/4	147±2	105
40	1.1/2	171±2	125

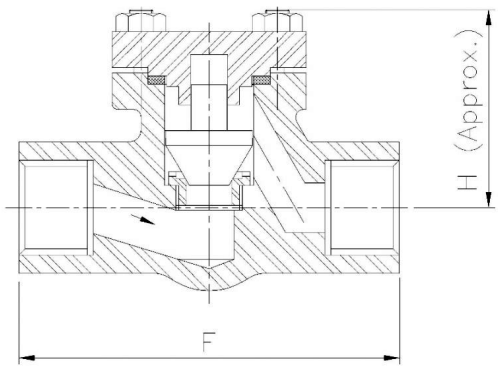

Notes
1. Product images are for illustration purposes only. Actual product may vary.
2. Actual dimensions may change over time, due to continual design improvements. Please confirm before placing order.

Sant Valves Pvt. Ltd.
G.T.Road Bye Pass,
Jalandhar – 144012. Punjab. INDIA
https://www.santvalves.com
Phone : +91 181 5084693
Fax: +91 181 5062270
Email : info@santvalves.com

SANT VALVES
SINCE 1953

ISO 9001 CERTIFIED COMPANY

FSV-7B Forged Steel Horizontal Lift Check Valve Socket Ended, Class-800

Product Description

HSN 84813000

Product : Sant Forged Steel Horizontal Lift Check Valve
Product Standard : BS 5352/API 602
Type of Pattern : Standard Bore
Pressure/Class /Rating : Class-800
Body Material cum standard : FCS (A 105)
Product Description : Bolted Cover
Type of Seat : Renewable Seat
Type of Disc : Renewable Disc
Trim : SS AISI 410
Fasteners : Alloy Steel (Gr. B7/2H)
End Details : Socket Welded Ends as per ASME B16.11
Gasket : Spiral wound SS 304/(CAF/Graphite Filled)

Testing & Certification

Body Test Pressure : 207 barg (3000Psig.) Hyd.
Seat Test Pressure : 152 barg (2200Psig.) Hyd.

Our Works' Test Certificate is furnished with every supply.

Dimensions (in mm)

Nominal Size	Nominal Size (Inches)	F	H (Approx)	⌀B	A
15	1/2	88±2	65	21.80	10
20	3/4	100±2	80	27.20	13
25	1	130±2	95	33.90	13
32	1.1/4	147±2	105	42.50	13
40	1.1/2	171±2	125	48.60	13

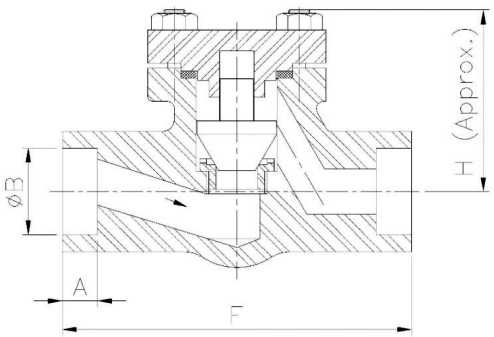

Notes
1. Product images are for illustration purposes only. Actual product may vary.
2. Actual dimensions may change over time, due to continual design improvements. Please confirm before placing order.

Sant Valves Pvt. Ltd.
G.T.Road Bye Pass,
Jalandhar – 144012. Punjab. INDIA
https://www.santvalves.com
Phone : +91 181 5084693
Fax: +91 181 5062270
Email : info@santvalves.com

SANT VALVES
SINCE 1953

ISO 9001 CERTIFIED COMPANY

FSV-8A Forged Steel Gate Valve Socket Ended, Class-1500

Product Description

HSN 84818030

Product : Sant Forged Steel Gate Valve
Product Standard : Conforming to BS-5352/API 602
Pressure Class Rating : Class 1500
Body Material cum standard : FCS (A 105)
Product Description : Bolted Bonnet O/S Yoke Type Rising Stem
Type of Seat : Renewable
Type of Wedge : Solid Wedge
Trim : SS AISI-410
End Details : Socket Welded ends as per ASME B 16.11

Testing & Certification

Body Test Pressure : 384 barg Hyd.
Seat Test Pressure : 281 barg Hyd., 6.9 barg (100 Psig) AIR

Our Works' Test Certificate is furnished with every supply.

Materials of Construction

Components	Materials	Specifications
Body, Bonnet, Gland Flange	Forged Carbon Steel	ASTM A105
Body Seat Ring, Wedge, Gland, Stem, Yoke Sleeve	Stainless Steel	AISI-410
Gland Packing	Expanded Pure Flexible Graphite	—
Gasket	Spiral Wound SS (AISI-304) Asbestos Filled / Graphite Filled	—
Handwheel	M.I. / D.I.	IS:14329
Studs / Bolts	Alloy Steel	ASTM A193 Gr.B7
Nuts	High Tensile Steel	ASTM A194 Gr.2H
Gland Nuts, Screw, Wheel Nuts & Washer	Mild Steel	—

Dimensions (in mm)

Nominal Size	Nominal Size (Inches)	F	H (Approx)	W (Approx)	A	B
15	1/2	88±2	148	76	10	21.7
20	3/4	100±2	175	86	13	27.2
25	1	105±2	210	120	13	33.9
32	1.1/4	117±2	270	120	13	42.55
40	1.1/2	117±2	270	120	13	48.65

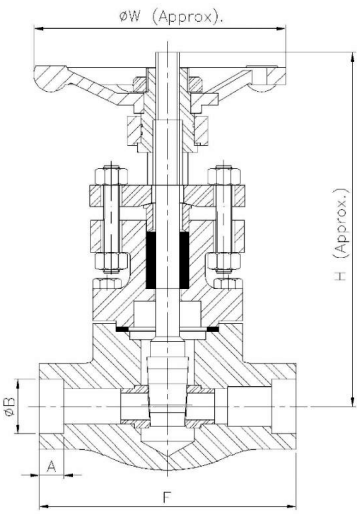

Notes

Sant Valves Pvt. Ltd.
G.T.Road Bye Pass,
Jalandhar – 144012. Punjab. INDIA

https://www.santvalves.com

Phone : +91 181 5084693
Fax: +91 181 5062270
Email : info@santvalves.com

SANT VALVES
SINCE 1953

ISO 9001 CERTIFIED COMPANY

FSV-9A Forged Steel Globe Valve Socket Ended, Class-1500

Product Description

HSN 84818030

Product : Sant Forged Steel Globe Valve
Product Standard : Conforming to BS-5352/API 602
Pressure Class Rating : Class 1500
Body Material cum standard : FCS (A 105)
Product Description : Bolted Bonnet O/S Yoke Type Rising Stem
Type of Seat : Renewable Seat
Type of Disc : Renewable Disc
Trim : SS AISI-410
End Details : Socket Welded ends as per ASME B 16.11

Testing & Certification

Body Test Pressure : 384 barg Hyd.
Seat Test Pressure : 281 barg Hyd., 6.9 barg (100 Psig) AIR

Our Works' Test Certificate is furnished with every supply.

Dimensions (in mm)

Nominal Size	Nominal Size (Inches)	F	H (Approx)	B	A	W
15	1/2	88±2	155	21.70	14	70
20	3/4	100±2	185	27.05	14	86
25	1	130±2	230	33.80	15	152
40	1.1/2	171±2	280	48.65	15	152

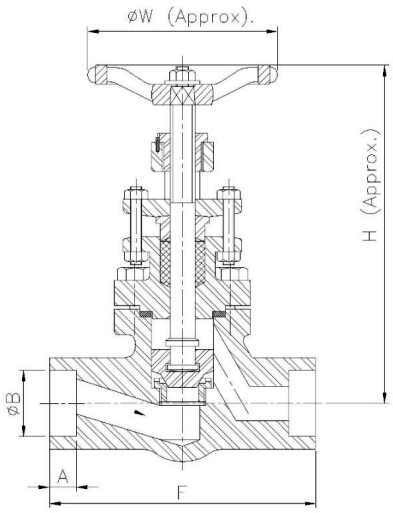

Notes
1. Product images are for illustration purposes only. Actual product may vary.
2. Actual dimensions may change over time, due to continual design improvements. Please confirm before placing order.

Sant Valves Pvt. Ltd.
G.T.Road Bye Pass,
Jalandhar – 144012. Punjab. INDIA
https://www.santvalves.com
Phone : +91 181 5084693
Fax: +91 181 5062270
Email : info@santvalves.com

SANT VALVES
SINCE 1953

ISO 9001 CERTIFIED COMPANY

FSV-10A Forged Steel Horizontal Check Valve Socket Ended, Class-1500

Product Description

HSN 84813000

Product : Sant Forged Steel Horizontal Check Valve
Product Standard : Conforming to BS-5352/API 602
Pressure Class Rating : Class 1500
Body Material cum standard : FCS (A 105)
Product Description : Bolted Cover
Type of Seat : Renewable Seat
Type of Disc : Renewable Disc
Trim : SS AISI-410
End Details : Socket Welded ends as per ASME B 16.11

Testing & Certification

Body Test Pressure : 384 barg Hyd.
Seat Test Pressure : 281 barg Hyd., 6.9 barg (100 Psig) AIR

Our Works' Test Certificate is furnished with every supply.

Dimensions (in mm)

Nominal Size	Nominal Size (Inches)	F	H (Approx)	B	A
15	1/2	88±2	65	21.70	14
20	3/4	100±2	80	27.05	14
25	1	130±2	100	33.80	14
40	1.1/2	171±2	125	48.65	15

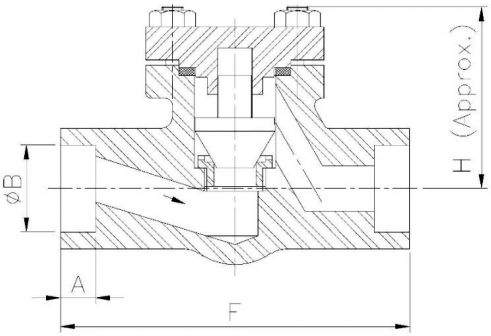

Notes
1. Product images are for illustration purposes only. Actual product may vary.
2. Actual dimensions may change over time, due to continual design improvements. Please confirm before placing order.

Sant Valves Pvt. Ltd.
G.T.Road Bye Pass,
Jalandhar – 144012. Punjab. INDIA
https://www.santvalves.com
Phone : +91 181 5084693
Fax: +91 181 5062270
Email : info@santvalves.com

SANT VALVES
SINCE 1953

ISO 9001 CERTIFIED COMPANY

FSV-11 Forged Steel Gate Valve Flanged, Class-600

Product Description

HSN 84818030

Product : Sant Forged Steel Gate Valve
Product Standard : API 602
Type of Pattern : Straight
Pressure/Class /Rating : Class-600
Body Material cum standard : FCS ASTM A 105
Product Description : Bolted Bonnet O/S Yoke Type Rising Stem
Type of Seat : Renewable Seat
Type of Wedge : Solid Wedge
Trim : AISI 410
End Details : Flanges as ASME B 16.5 Class 600 RF Undrilled

Testing & Certification

Body Test Pressure : 153 Barg (2220Psig.) Hyd.
Seat Test Pressure : 112 Barg (1630Psig.) Hyd. 6.9 Barg (100 Psig) AIR

Our Works' Test Certificate is furnished with every supply.

Materials of Construction

Components	Materials	Specifications
Body, Bonnet, Gland Flange	Forged Carbon Steel	ASTM A105
Body Seat Ring, Wedge, Gland, Stem, Yoke Sleeve	Stainless Steel	AISI-410
Gland Packing	Expanded Pure Flexible Graphite	—
Gasket	Spiral Wound SS (AISI-304) Asbestos Filled / Graphite Filled	—
Handwheel	M.I. / D.I.	IS:14329
Studs / Bolts	Alloy Steel	ASTM A193 Gr.B7
Nuts	High Tensile Steel	ASTM A194 Gr.2H
Gland Nuts, Screw, Wheel Nuts & Washer	Mild Steel	—

Dimensions (in mm)

Nominal Size	Nominal Size (Inches)	F	H (Approx)	W (Approx)
15	1/2	165±2	135	98
20	3/4	190±2	140	98
25	1	216±2	165	105
40	1.1/2	241±2	230	140

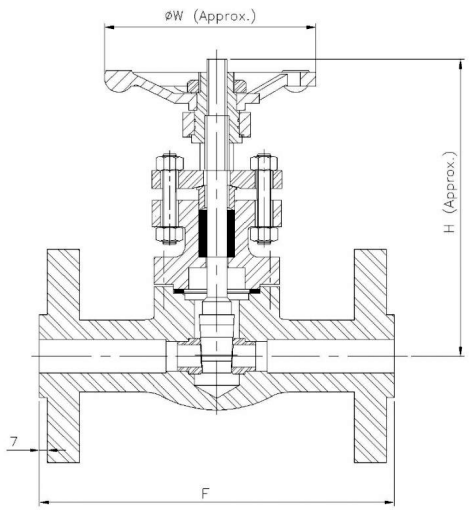

Notes

Sant Valves Pvt. Ltd.
G.T.Road Bye Pass,
Jalandhar – 144012. Punjab. INDIA

https://www.santvalves.com

Phone : +91 181 5084693
Fax: +91 181 5062270
Email : info@santvalves.com

SANT VALVES
SINCE 1953

ISO 9001 CERTIFIED COMPANY

FSV-12 Forged Steel Globe Valve Flanged, Class-600

Product Description

HSN 84818030

Product : Sant Forged Steel Globe Valve
Product Standard : API 602
Pressure Class Rating : Class 600
Body Material cum standard : FCS ASTM A 105
Product Description : Bolted Bonnet O/S Yoke Type Rising Stem
Type of Seat : Renewable Seat
Type of Disc : Renewable Disc
Trim : AISI-410
End Details : Flanges as ASME B 16.5 Class 600 RF Undrilled

Photo Not Available

Testing & Certification

Body Test Pressure : 153 Barg (2220Psig.) Hyd.
Seat Test Pressure : 112 Barg (1630Psig.) Hyd. 6.9 Barg (100 Psig) AIR

Our Works' Test Certificate is furnished with every supply.

Materials of Construction

Components	Materials	Specifications
Body, Bonnet, Gland Flange	Drop Forged C.Steel	ASTM A105
Body Seat Ring, Disc, Gland, Stem, Yoke Bush	Stainless Steel	AISI-410
Gland Packing	Expanded Pure Flexible Graphite	—
Gasket	Spiral Wound SS (AISI-304) Asbestos Filled / Graphite Filled	—
Handwheel	Malleable Iron / D.I.	IS:14329
Studs / Bolts	Alloy Steel	ASTM A193 Gr.B7
Nuts	High Tensile Steel	ASTM A194 Gr.2H
Gland Nuts, Screw, Wheel Nuts & Washer	Mild Steel	—

Dimensions (in mm)

Nominal Size	Nominal Size (Inches)	F	H (Approx)	W (Approx)
15	1/2	165±2	145	76
20	3/4	190±2	155	76
25	1	216±2	185	86
40	1.1/2	241±2	211	152

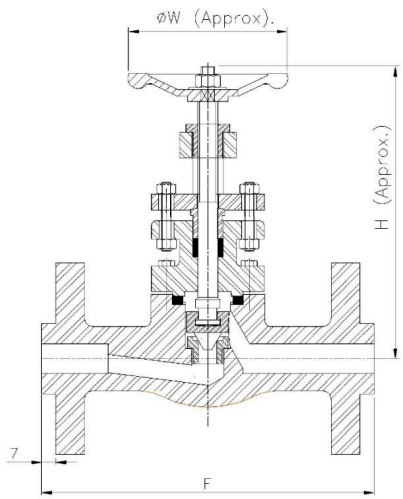

Notes
1. Product images are for illustration purposes only. Actual product may vary.

Sant Valves Pvt. Ltd.
G.T.Road Bye Pass,
Jalandhar – 144012. Punjab. INDIA
https://www.santvalves.com
Phone : +91 181 5084693
Fax: +91 181 5062270
Email : info@santvalves.com

SANT VALVES
SINCE 1953

ISO 9001 CERTIFIED COMPANY

FSPVS Forged Steel Piston Valve Screwed, Class-800

Product Description

HSN 84818090

Product : Sant Forged Steel Piston Valve Screwed End
Body Material : ASTM A 105
Pressure Rating : Class 800
Product Description : Bolted Bonnet Rising Stem
Type of Piston : AISI-420
End Details : Screwed End NPT Threads

Testing & Certification

Body Test Pressure : 207barg (Hyd.)
Seat Test Pressure : 152barg (Hyd.)

Materials of Construction

Components	Materials	Specifications
Wheel	M.S (Powder Coated)	
Bonnet	FCS	A-105
Stem	SS	AISI-420
Piston	SS	AISI-420
Nut	Steel	A-194 Gr-2H
Studs	Steel	A-193 Gr-B7
Seal	Graphite	–
Piston guide	FCS	A-105
Body	FCS	A-105

Dimensions (in mm)

Size	F	H	W
15	79	116	85
20	92	120	85
25	110	145	99

Notes
1. Product images are for illustration purposes only. Actual product may vary.
2. Actual dimensions may change over time, due to continual design improvements. Please confirm before placing order.

Sant Valves Pvt. Ltd.
G.T.Road Bye Pass,
Jalandhar – 144012. Punjab. INDIA

https://www.santvalves.com

Phone : +91 181 5084693
Fax: +91 181 5062270
Email : info@santvalves.com

SANT VALVES
SINCE 1953

ISO 9001 CERTIFIED COMPANY

CI-1A Cast Iron Globe Valve Flanged (IBR Approved)

Product Description

HSN 84818030

Product : ‘SANT’ Cast Iron Globe Valve
Product Standard : BS:5152 / DIN 86251
Type of Pattern : Straight Pattern
Pressure / Class / Rating : PN 16
Body Material cum Standard : Cast Iron IBR 86 to 93 Gr.A
Description : Bolted Bonnet, Outside Screw & Yoke Type Rising Stem
Type of Seat : Renewable seat
Type of Disc : Renewable disc
Trim : SS AISI-410
Gland Packing : Expanded Pure Flexible Graphite
End Details : Flanges as per DIN 2533 RF (PN 16) Undrilled

Testing & Certification

Rating : PN 16
Body Test Pressure : 26Kg/cm²g (Hyd.)
Seat Test Pressure : 16Kg/cm²g (Hyd.)
Backseat Pressure : 16Kg/cm²g (Hyd.)
Working Pressure : Max BOP 13Kg/cm²g at 220°C Steam

Test Certificate in Form III-C as per IBR is furnished with every supply.

Application

Water	Steam

Materials of Construction

Components	Materials	Specifications
Body, Bonnet, Valve Disc, Gland & Handwheel	Cast Iron	IBR 86 to 93 Gr.A
Body Seat Ring, Valve Disc Ring, Spindle & Check Nut	Stainless Steel	AISI-410
Gasket	Compressed Asbestos	IS:2712 Gr.C
Gland Packing	Expanded Pure Flexible Graphite	—
Fasteners	Mild Steel	—
Yoke Bush	Aluminum Bronze	—

Dimensions (in mm)

Nominal Size	Nominal Size (Inches)	F	H (Open)	ØW (Approx.)
15	1/2	130±1	180	125
20	3/4	150±1	190	125
25	1	160±1	200	125
32	1.1/4	180±1	225	125
40	1.1/2	200±1	250	160
50	2	230±2	260	160
65	2.1/2	290±2	315	200
80	3	310±2	350	200
100	4	350±2	410	250
125	5	400±3	455	250
150	6	480±3	530	315
200	8	600±3	600	400

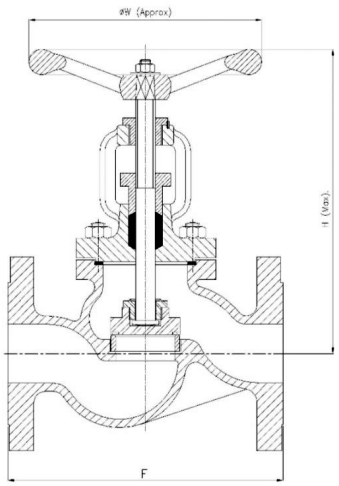

Sant Valves Pvt. Ltd.
G.T.Road Bye Pass,
Jalandhar – 144012. Punjab. INDIA

https://www.santvalves.com

Phone : +91 181 5084693
Fax: +91 181 5062270
Email : info@santvalves.com

SANT VALVES
SINCE 1953

I.B.R | ISI | UL LISTED | FM APPROVED

ISO 9001 CERTIFIED COMPANY

CI-2A Cast Iron Junction Steam Stop Valve Flanged (IBR Approved)

Product Description

HSN 84818030

Product : 'SANT' Cast Iron Junction Steam Stop Valve
Product Standard : BS:5152 / DIN 86251
Type of Pattern : Right Angle Pattern
Pressure / Class / Rating : PN 16
Body Material cum Standard : Cast Iron IBR 86 to 93 Gr.A
Description : Bolted Bonnet, Outside Screw & Yoke Type Rising Stem
Type of Seat : Renewable seat
Type of Disc : Renewable disc
Trim : SS AISI-410
Gland Packing : Expanded Pure Flexible Graphite
End Details : Flanges as per DIN 2533 RF (PN 16) Undrilled

Testing & Certification

Rating : PN 16
Body Test Pressure : 26Kg/cm²g (Hyd.)
Seat Test Pressure : 16Kg/cm²g (Hyd.)
Backseat Pressure : 16Kg/cm²g (Hyd.)
Working Pressure : Max BOP 13Kg/cm²g at 220°C Steam

Test Certificate in Form III-C as per IBR is furnished with every supply.

Application

Water	Steam

Materials of Construction

Components	Materials	Specifications
Body, Bonnet, Valve Disc, Gland & Handwheel	Cast Iron	IBR 86 to 93 Gr.A
Body Seat Ring, Valve Disc Ring, Spindle & Check Nut	Stainless Steel	AISI-410
Gasket	Compressed Asbestos	IS:2712 Gr.C
Gland Packing	Expanded Pure Flexible Graphite	—
Fasteners	Mild Steel	—
Yoke Bush	Aluminum Bronze	—

Dimensions (in mm)

Nominal Size	Nominal Size (Inches)	F	H (Open)	ØW (Approx.)
15	1/2	90±2	185	125
20	3/4	95±2	185	125
25	1	100±2	185	125
32	1.1/4	105±2	200	125
40	1.1/2	115±2	250	160
50	2	125±2	260	160
65	2.1/2	145±2	275	200
80	3	155±2	300	200
100	4	175±2	350	250
125	5	200±2	395	250
150	6	225±2	450	315
200	8	275±2	510	400

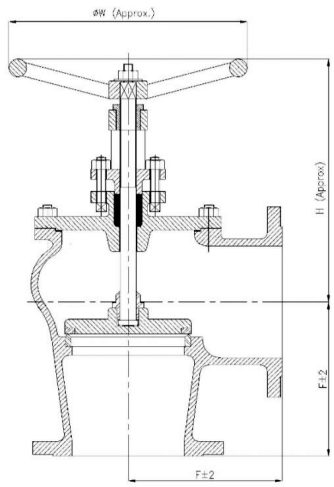

Notes

Sant Valves Pvt. Ltd.
G.T.Road Bye Pass,
Jalandhar – 144012. Punjab. INDIA

https://www.santvalves.com

Phone : +91 181 5084693
Fax: +91 181 5062270
Email : info@santvalves.com

SANT VALVES
SINCE 1953

ISO 9001 CERTIFIED COMPANY

CI-3A Cast Iron Horizontal Check Valve Flanged (IBR Approved)

Product Description

HSN 84813000

Product : ‘SANT’ Cast Iron Horizontal Check Valve
Product Standard : BS:5153
Type of Pattern : Straight Type
Pressure / Class / Rating : PN 16
Body Material cum Standard : Cast Iron IBR 86 to 93 Gr.A
Description : Bolted Cover
Type of Seat : Renewable seat
Type of Disc : Renewable disc
Trim : SS AISI-410
End Details : Flanges as per DIN 2533 RF (PN 16) Undrilled

Testing & Certification

Rating : PN 16
Body Test Pressure : 26Kg/cm²g (Hyd.)
Seat Test Pressure : 16Kg/cm²g (Hyd.)
Working Pressure : Max BOP 13Kg/cm²g at 220°C Steam

Test Certificate in Form III-C as per IBR is furnished with every supply.

Application

Water	Steam

Materials of Construction

Components	Materials	Specifications
Body, Bonnet, Valve Disc	Cast Iron	IBR 86 to 93 Gr.A
Body Seat Ring, Valve Disc Ring	Stainless Steel	AISI-410
Gasket	Compressed Asbestos Fiber	IS:2712 Gr.C
Fasteners	Mild Steel	—

Dimensions (in mm)

Nominal Size	Nominal Size (Inches)	F	H (Approx.)
15	1/2	130±1	70
20	3/4	150±1	70
25	1	160±1	80
32	1.1/4	180±1	95
40	1.1/2	200±1	100
50	2	230±2	110
65	2.1/2	290±2	130
80	3	310±2	150
100	4	350±2	160
125	5	400±3	200
150	6	480±3	215
200	8	600±3	250

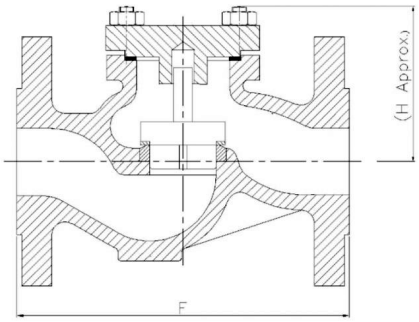

Notes
1. Product images are for illustration purposes only. Actual product may vary.
2. Actual dimensions may change over time, due to continual design improvements. Please confirm before placing order.

Sant Valves Pvt. Ltd.
G.T.Road Bye Pass,
Jalandhar – 144012. Punjab. INDIA
https://www.santvalves.com
Phone : +91 181 5084693
Fax: +91 181 5062270
Email : info@santvalves.com

SANT VALVES
SINCE 1953

I.B.R · ISI · UL LISTED · FM APPROVED

ISO 9001 CERTIFIED COMPANY

CI-3C Cast Iron Swing Check Valve Flanged (IBR Approved)

Product Description

HSN 84813000

Product : 'SANT' Cast Iron Swing Check Valve
Product Standard : BS:5153
Type of Pattern : Straight Type
Pressure / Class / Rating : Class 125
Body Material cum Standard : Cast Iron IBR 86 to 93 Gr.A
Description : Bolted Cover
Type of Seat : Renewable seat
Type of Disc : Renewable disc
Trim : SS AISI-410
End Details : Flanges as per BS 10 Table F undrilled

Testing & Certification

Body Test Pressure : 300 Psig.Hyd.
Seat Test Pressure : 200 Psig.Hyd.
Working Pressure : Max.BOP 150 Psig.(10.54Kg/cm²)

Test Certificate in Form III-C as per IBR is furnished with every supply.

Application

Water	Oil	Steam

Materials of Construction

Components	Materials	Specifications
Body, Bonnet, Valve Disc & Hinge	Cast Iron	IBR 86 to 93 Gr.A
Body Seat Ring, Valve Disc Ring, Hinge Pin & Plugs	Stainless Steel	AISI-410
Gasket	Compressed Asbestos Fiber	IS:2712 Gr.C
Fasteners	Mild Steel	—

Dimensions (in mm)

Nominal Size	Nominal Size (Inches)	F	H (Approx.)
40	1.1/2	165±2	130
50	2	203.2±2	140
65	2.1/2	216±2	155
80	3	241.3±2	170
100	4	292.1±2	200
125	5	330.2±2	210
150	6	355.6±2	240
200	8	495.3±2	270

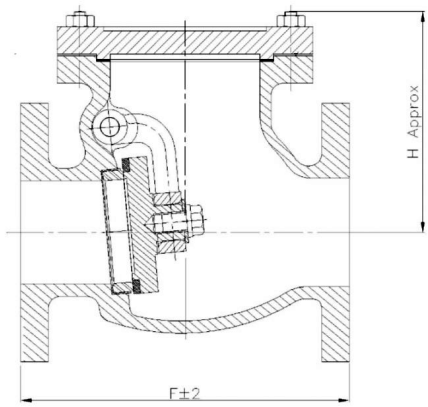

Notes
1. Product images are for illustration purposes only. Actual product may vary.
2. Actual dimensions may change over time, due to continual design improvements. Please confirm before placing order.

Sant Valves Pvt. Ltd.
G.T.Road Bye Pass,
Jalandhar – 144012. Punjab. INDIA

https://www.santvalves.com

Phone : +91 181 5084693
Fax: +91 181 5062270
Email : info@santvalves.com

SANT VALVES
SINCE 1953

I.B.R | ISI | UL LISTED | FM APPROVED

ISO 9001 CERTIFIED COMPANY

CI-4A Cast Iron Right Angle Lift Check Valve Flanged (IBR Approved)

Product Description

HSN 84813000

Product : 'SANT' Cast Iron Right Angle Lift Check Valve
Product Standard : BS:5153
Type of Pattern : Right Angle
Pressure / Class / Rating : PN 16
Body Material cum Standard : Cast Iron IBR 86 to 93 Gr.A
Description : Bolted Cover
Type of Seat : Renewable seat
Type of Disc : Renewable disc
Trim : SS AISI-410
End Details : Flanges as per DIN 2533 RF (PN 16) Undrilled

Testing & Certification

Rating : PN 16
Body Test Pressure : 26Kg/cm²g (Hyd.)
Seat Test Pressure : 16Kg/cm²g (Hyd.)
Working Pressure : Max BOP 13Kg/cm²g at 220°C Steam

Test Certificate in Form III-C as per IBR is furnished with every supply.

Application

Water	Steam

Materials of Construction

Components	Materials	Specifications
Body, Bonnet, Valve Disc	Cast Iron	IBR 86 to 93 Gr.A
Body Seat Ring, Valve Disc Ring	Stainless Steel	AISI-410
Gasket	Compressed Asbestos Fiber	IS:2712 Gr.C
Fasteners	Mild Steel	—

Dimensions (in mm)

Nominal Size	Nominal Size (Inches)	F ±2	H (Approx)
15	1/2	90	60
20	3/4	95	60
25	1	100	60
32	1.1/4	105	70
40	1.1/2	115	80
50	2	125	85
65	2.1/2	145	100
80	3	155	110
100	4	175	115
125	5	200	130
150	6	225	150
200	8	275	175

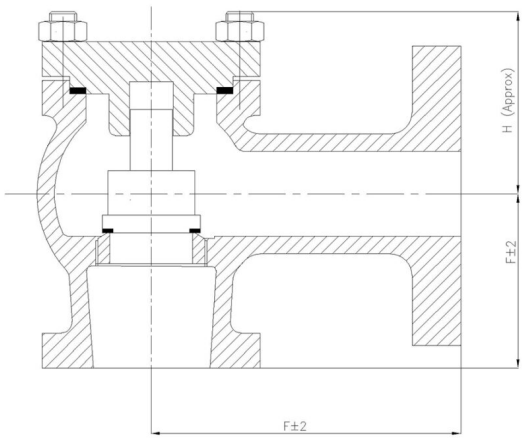

Notes
1. Product images are for illustration purposes only. Actual product may vary.
2. Actual dimensions may change over time, due to continual design improvements. Please confirm before placing order.

Sant Valves Pvt. Ltd.
G.T.Road Bye Pass,
Jalandhar – 144012. Punjab. INDIA
https://www.santvalves.com
Phone : +91 181 5084693
Fax: +91 181 5062270
Email : info@santvalves.com

SANT VALVES
SINCE 1953

ISO 9001 CERTIFIED COMPANY

CI-5A Cast Iron Accessible Feed Check Valve Flanged, without Inspection Branch (IBR Approved)

Product Description

HSN 84813000

Product : 'SANT' Cast Iron Accessible Feed Check Valve
Type of Pattern : Right Angle
Body Material cum Standard : Cast Iron IBR 86 to 93 Gr.A
Description : Straight Inlet without Inspection Branch
Type of Seat : Renewable seat
Type of Disc : Renewable disc
Trim : SS AISI-410
Gland Packing : Expanded Pure Flexible Graphite
End Details : Flanges as per BS 10 Table F & H F.F. undrilled

Testing & Certification

TABLE – F
Body Test Pressure : 21.09Kg/cm²g
Seat & Backseat Test Pressure : 10.54Kg/cm²g
Working Pressure : Max BOP 10.54Kg/cm²g (150 Psig.) at 220°C Steam

TABLE – H
Body Test Pressure : 26Kg/cm²g
Seat & Backseat Test Pressure : 13Kg/cm²g
Working Pressure : Max BOP 13Kg/cm²g (185 Psig.) at 220°C Steam

Test Certificate in Form III-C as per IBR is furnished with every supply.

Application

Water	Steam

Materials of Construction

Components	Materials	Specifications
Body, Bonnet, Valve Disc, Gland & Handwheel	Cast Iron	IBR 86 to 93 Gr.A
Body Seat Ring, Valve Disc Rings & Check Nut	Stainless Steel	AISI-410
Gasket	Compressed Asbestos Fiber	IS:2712 Gr.C
Gland Packing	Expanded Pure Flexible Graphite	—
Fasteners	Mild Steel	—
Yoke Bush	Aluminum Bronze	—

Dimensions (in mm)

Nominal Size	Nominal Size (Inches)	B±2	C (Closed)	G±2	ØW
25	1	225	180	100	125
32	1.1/4	240	190	105	125
40	1.1/2	265	210	115	160
50	2	280	220	125	160
65	2.1/2	300	250	145	200

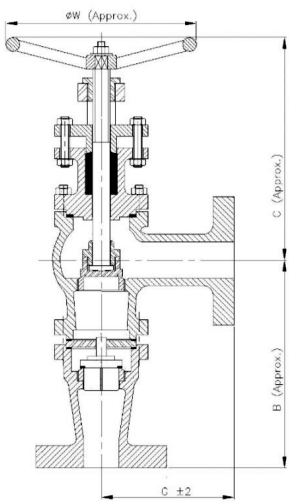

Notes

Sant Valves Pvt. Ltd.
G.T.Road Bye Pass,
Jalandhar – 144012. Punjab. INDIA

https://www.santvalves.com

Phone : +91 181 5084693
Fax: +91 181 5062270
Email : info@santvalves.com

SANT VALVES
SINCE 1953

ISO 9001 CERTIFIED COMPANY

CI-5B Cast Iron Accessible Feed Check Valve Flanged, without Inspection Branch (IBR Approved)

Product Description

HSN 84813000

Product : ‘SANT’ Cast Iron Accessible Feed Check Valve
Type of Pattern : Right Angle
Body Material cum Standard : Cast Iron IBR 86 to 93 Gr.A
Description : Curved Inlet without Inspection Branch
Type of Seat : Renewable seat
Type of Disc : Renewable disc
Trim : SS AISI-410
Gland Packing : Expanded Pure Flexible Graphite
End Details : Flanges as per BS 10 Table F F.F. undrilled

Photo Not Available

Testing & Certification

TABLE – F
Body Test Pressure : 21.09Kg/cm²g
Seat & Backseat Test Pressure : 10.54Kg/cm²g
Working Pressure : Max BOP 10.54Kg/cm²g (150 Psig.) at 220°C Steam

Test Certificate in Form III-C as per IBR is furnished with every supply.

Application

Water	Steam

Materials of Construction

Components	Materials	Specifications
Body, Bonnet, Valve Disc, Gland & Handwheel	Cast Iron	IBR 86 to 93 Gr.A
Body Seat Ring, Valve Disc Rings & Check Nut	Stainless Steel	AISI-410
Stopper & Drain Plug	Bronze	IBR 282(a)(iv) Gr.B
Gasket	Compressed Asbestos Fiber	IS:2712 Gr.C
Gland Packing	Expanded Pure Flexible Graphite	—
Fasteners	Mild Steel	—
Yoke Bush	Bronze	—

Dimensions (in mm)

Nominal Size	Nominal Size (Inches)	B±2	C	F	G±2	ØW
25	1	220	180	95	100	125
32	1.1/4	240	190	105	105	125
40	1.1/2	260	200	110	115	160
50	2	280	210	120	125	160
65	2.1/2	300	250	130	145	200

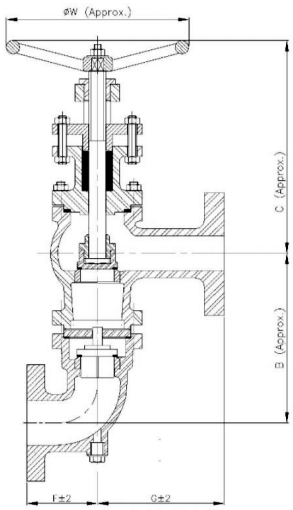

Notes
1. Product images are for illustration purposes only. Actual product may vary.

Sant Valves Pvt. Ltd.
G.T.Road Bye Pass,
Jalandhar – 144012. Punjab. INDIA
https://www.santvalves.com
Phone : +91 181 5084693
Fax: +91 181 5062270
Email : info@santvalves.com

SANT VALVES
SINCE 1953

I.B.R LISTED FM APPROVED

ISO 9001 CERTIFIED COMPANY

CI-5C Cast Iron Accessible Feed Check Valve Flanged, with Inspection Branch (IBR Approved)

Product Description

HSN 84813000

Product : 'SANT' Cast Iron Accessible Feed Check Valve
Type of Pattern : Right Angle
Body Material cum Standard : Cast Iron IBR 86 to 93 Gr.A
Description : Straight Inlet with Inspection Branch
Type of Seat : Renewable seat
Type of Disc : Renewable disc
Trim : SS AISI-410
Gland Packing : Expanded Pure Flexible Graphite
End Details : Flanges as per BS 10 Table F F.F. undrilled

Testing & Certification

TABLE – F
Body Test Pressure : 21.09Kg/cm²g
Seat & Backseat Test Pressure : 10.54Kg/cm²g
Working Pressure : Max BOP 10.54Kg/cm²g (150 Psig.) at 220°C Steam

Test Certificate in Form III-C as per IBR is furnished with every supply.

Application

Water	Steam

Materials of Construction

Components	Materials	Specifications
Body, Bonnet, Valve Disc, Gland & Handwheel	Cast Iron	IBR 86 to 93 Gr.A
Body Seat Ring, Valve Disc Rings & Check Nut	Stainless Steel	AISI-410
Gasket	Compressed Asbestos Fiber	IS:2712 Gr.C
Gland Packing	Expanded Pure Flexible Graphite	—
Fasteners	Mild Steel	—
Yoke Bush	Aluminum Bronze	—

Dimensions (in mm)

Nominal Size	Nominal Size (Inches)		B±2	C	G±2	ØW
32	1.1/4		240	190	105	125
40	1.1/2		260	200	115	160
50	2		280	210	125	160
65	2.1/2		300	250	145	200

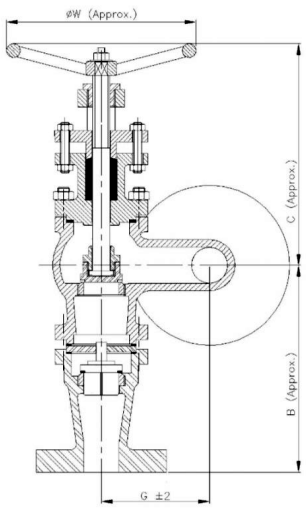

Notes
1. Product images are for illustration purposes only. Actual product may vary.
2. Actual dimensions may change over time, due to continual design improvements. Please confirm before placing order.

Sant Valves Pvt. Ltd.
G.T.Road Bye Pass,
Jalandhar – 144012. Punjab. INDIA
https://www.santvalves.com
Phone : +91 181 5084693
Fax: +91 181 5062270
Email : info@santvalves.com

SANT VALVES
SINCE 1953

ISO 9001 CERTIFIED COMPANY

CI-5D Cast Iron Accessible Feed Check Valve Flanged, with Inspection Branch (IBR Approved)

Product Description

HSN 84813000

Product : ‘SANT’ Cast Iron Accessible Feed Check Valve
Type of Pattern : Right Angle
Body Material cum Standard : Cast Iron IBR 86 to 93 Gr.A
Description : Curved Inlet with Inspection Branch
Type of Seat : Renewable seat
Type of Disc : Renewable disc
Trim : SS AISI-410
Gland Packing : Expanded Pure Flexible Graphite
End Details : Flanges as per BS 10 Table F F.F. undrilled

Testing & Certification

TABLE – F
Body Test Pressure : 21.09Kg/cm²g
Seat & Backseat Test Pressure : 10.54Kg/cm²g
Working Pressure : Max BOP 10.54Kg/cm²g (150 Psig.) at 220°C Steam

Test Certificate in Form III-C as per IBR is furnished with every supply.

Application

Water	Steam

Materials of Construction

Components	Materials	Specifications
Body, Bonnet, Valve Disc, Gland & Handwheel	Cast Iron	IBR 86 to 93 Gr.A
Body Seat Ring, Valve Disc Rings & Check Nut	Stainless Steel	AISI-410
Stopper & Drain Plug	Bronze	IBR 282(a)(iv) Gr.B
Gasket	Compressed Asbestos Fiber	IS:2712 Gr.C
Gland Packing	Expanded Pure Flexible Graphite	—
Fasteners	Mild Steel	—
Yoke Bush	Aluminum Bronze	—

Dimensions (in mm)

Nominal Size	Nominal Size (Inches)	B		C	F	G±2	ØW
32	1.1/4	209		190	105	105	125
40	1.1/2	235		200	110	115	160
50	2	255		210	120	125	160
65	2.1/2	300		250	130	145	200

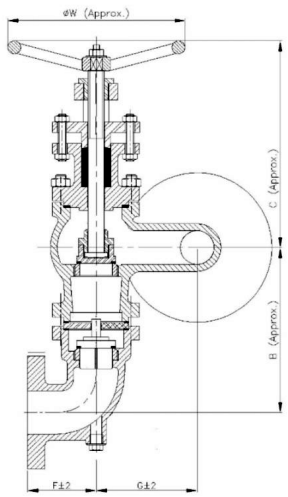

Notes
1. Product images are for illustration purposes only. Actual product may vary.

Sant Valves Pvt. Ltd.
G.T.Road Bye Pass,
Jalandhar – 144012. Punjab. INDIA
https://www.santvalves.com
Phone : +91 181 5084693
Fax: +91 181 5062270
Email : info@santvalves.com

SANT VALVES
SINCE 1953

I.B.R ISI UL LISTED FM APPROVED

ISO 9001 CERTIFIED COMPANY

CI-6A Cast Iron Stop Cum Non-Return Valve Flanged, Straight (IBR Approved)

Product Description

HSN 84813000

Product : 'SANT' Cast Iron Stop Cum Non Return Valve
Product Standard : BS:5152
Type of Pattern : Straight
Pressure / Class / Rating : PN 16
Body Material cum Standard : Cast Iron IBR 86 to 93 Gr.A
Description : Bolted Bonnet, Outside Screw & Yoke Type Rising Stem
Type of Seat : Renewable seat
Type of Disc : Renewable disc
Trim : SS AISI-410
Gland Packing : Expanded Pure Flexible Graphite
End Details : Flanges as per DIN 2533 RF (PN 16) Undrilled

Photo Not Available

Testing & Certification

Rating : PN 16
Body Test Pressure : 26Kg/cm²g (Hyd.)
Seat Test Pressure : 16Kg/cm²g (Hyd.)
Back Seat Test Pressure : 16Kg/cm²g (Hyd.)
Working Pressure : Max BOP 13Kg/cm²g at 220°C Steam

Test Certificate in Form III-C as per IBR is furnished with every supply.

Application

Water	Oil	Steam

Materials of Construction

Components	Materials	Specifications
Body, Bonnet, Valve Disc, Gland & Handwheel	Cast Iron	IS:210 Gr.FG200
Body Seat Ring, Valve Disc Ring & Stem	Stainless Steel	AISI-410
Gasket	Compressed Asbestos Fiber	IS:2712 Gr.C
Gland Packing	Expanded Pure Flexible Graphite	—
Fasteners	Mild Steel	—
Yoke Bush	Aluminum Bronze	—

Dimensions (in mm)

Nominal Size	Nominal Size (Inches)	F	H (closed)	W
40	1.1/2	200±1	220	160
50	2	230±2	240	160
65	2.1/2	290±2	280	200
80	3	310±2	310	200
100	4	350±2	350	250
125	5	400±3	400	250
150	6	480±3	460	315
200	8	600±3	510	400

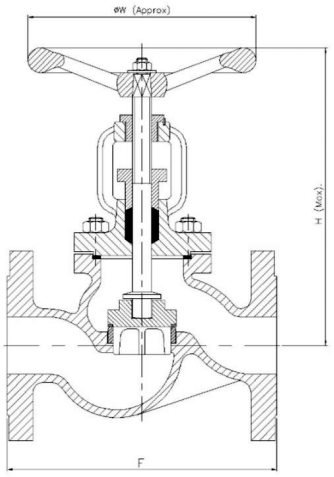

Notes
1. Product images are for illustration purposes only. Actual product may vary.

Sant Valves Pvt. Ltd.
G.T.Road Bye Pass,
Jalandhar – 144012. Punjab. INDIA
https://www.santvalves.com
Phone : +91 181 5084693
Fax: +91 181 5062270
Email : info@santvalves.com

SANT VALVES
SINCE 1953

I.B.R ISI UL LISTED FM APPROVED
ISO 9001 CERTIFIED COMPANY

CI-6B Cast Iron Stop Cum Non-Return Valve Flanged, Right Angle (IBR Approved)

Product Description

HSN 84813000

Product : 'SANT' Cast Iron Stop Cum Non Return Valve
Product Standard : BS:5152
Type of Pattern : Right Angle
Pressure / Class / Rating : PN 16
Body Material cum Standard : Cast Iron IBR 86 to 93 Gr.A
Description : Bolted Bonnet, Outside Screw & Yoke Type Rising Stem
Type of Seat : Renewable seat
Type of Disc : Renewable disc
Trim : SS AISI-410
Gland Packing : Expanded Pure Flexible Graphite
End Details : Flanges as per DIN 2533 RF (PN 16) Undrilled

Photo Not Available

Testing & Certification

Rating : PN 16
Body Test Pressure : 26Kg/cm²g (Hyd.)
Seat Test Pressure : 16Kg/cm²g (Hyd.)
Back Seat Test Pressure : 16Kg/cm²g (Hyd.)
Working Pressure : Max BOP 13Kg/cm²g at 220°C Steam

Test Certificate in Form III-C as per IBR is furnished with every supply.

Application

Water	Oil	Steam

Materials of Construction

Components	Materials	Specifications
Body, Bonnet, Valve Disc, Gland & Handwheel	Cast Iron	IS:210 Gr.FG200
Body Seat Ring, Valve Disc Ring & Stem	Stainless Steel	AISI-410
Gasket	Compressed Asbestos Fiber	IS:2712 Gr.C
Gland Packing	Expanded Pure Flexible Graphite	—
Fasteners	Mild Steel	—
Yoke Bush	Aluminum Bronze	—

Dimensions (in mm)

Nominal Size	Nominal Size (Inches)	F	H	W
40	1.1/2	115	200	160
50	2	125	210	160
65	2.1/2	145	250	200
80	3	155	270	200
100	4	175	300	250
125	5	200	350	250
150	6	225	400	315
200	8	275	430	400

Notes
1. Product images are for illustration purposes only. Actual product may vary.
2. Actual dimensions may change over time, due to continual design improvements. Please confirm before placing order.

Sant Valves Pvt. Ltd.
G.T.Road Bye Pass,
Jalandhar – 144012. Punjab. INDIA
https://www.santvalves.com
Phone : +91 181 5084693
Fax: +91 181 5062270
Email : info@santvalves.com

SANT VALVES
SINCE 1953

I.B.R | ISI | UL LISTED | FM APPROVED

ISO 9001 CERTIFIED COMPANY

CI-7A Cast Iron Y-Type Strainer Flanged (IBR Approved)

Product Description

HSN 84818030

Product : 'SANT' Cast Iron Y-Type Strainer
Type of Pattern : Y-Type
Body Material cum Standard : Cast Iron IBR 86 to 93 Gr.A
Description : Bolted Cover
Trim : SS-304 Screen having 1.2 mm dia perforation
End Details : Flanges as per BS 10 Table F, FF undrilled

Testing & Certification

Test Pressure : 300 Psig.Hyd.
Working Pressure : Max BOP 10.54Kg/cm²g (150 Psig.) at 220° C Steam

Test Certificate in Form lll-C as per IBR is furnished with every supply.

Application

Water	Oil	Steam

Materials of Construction

Components	Materials	Specifications
Body, Bonnet	Cast Iron	IBR 86 to 93 Gr.A
Drain Plug for 25mm & above	Bronze / SS	IBR 282(a)(iv) Gr.B / AISI-410
Strainer	S.S.	AISI-304
Gasket	Compressed Asbestos Fibre	IS:2712 Gr.C
Fasteners	Mild Steel	—

Dimensions (in mm)

Nominal Size	Nominal Size (Inches)	F
25	1	162±1
40	1.1/2	206±2
50	2	210±2
65	2.1/2	248±2
80	3	270±2
100	4	381±2
125	5	416±2
150	6	451±2
200	8	523±3

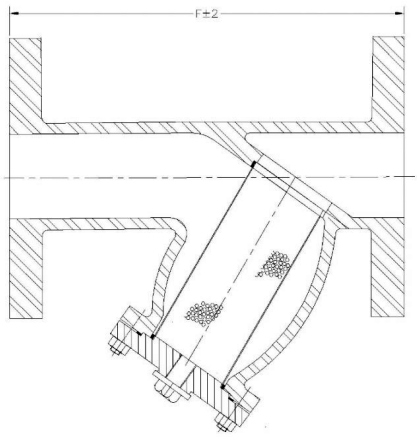

Notes
1. Product images are for illustration purposes only. Actual product may vary.
2. Actual dimensions may change over time, due to continual design improvements. Please confirm before placing order.

Sant Valves Pvt. Ltd.
G.T.Road Bye Pass,
Jalandhar – 144012. Punjab. INDIA

https://www.santvalves.com

Phone : +91 181 5084693
Fax: +91 181 5062270
Email : info@santvalves.com

SANT VALVES
SINCE 1953

ISO 9001 CERTIFIED COMPANY

CI-7B Cast Iron Y-Type Strainer Screwed (IBR Approved)

Product Description

HSN 84818030

Product : 'SANT' Cast Iron Y-Type Strainer
Type of Pattern : Y-Type
Body Material cum Standard : Cast Iron IBR 86 to 93 Gr.A
Description : Bolted Cover
Trim : SS 304 Screen having 1.2 mm dia perforation
End Details : Female BSP Parallel threads to BS 21

Testing & Certification

Test Pressure : 26Kg/cm2g (370 Psig.) Hyd.
Working Pressure : Max BOP 13Kg/cm²g (185 Psig.) at 220°C Steam

Test Certificate in Form lll-C as per IBR is furnished with every supply.

Application

Water	Oil	Steam

Materials of Construction

Components	Materials	Specifications
Body, Bonnet	Cast Iron	IBR 86 to 93 Gr.A
Drain Plug for 25mm & above	Bronze / SS	IBR 282(a)(iv) Gr.B / AISI410
Strainer	S.S.	AISI-304
Gasket	Compressed Asbestos Fibre	IS:2712 Gr.C
Fasteners	Mild Steel	—

Dimensions (in mm)

Nominal Size	Nominal Size (Inches)	F±2
15	1/2	76
20	3/4	98
25	1	133
32	1.1/4	133
40	1.1/2	178
50	2	222

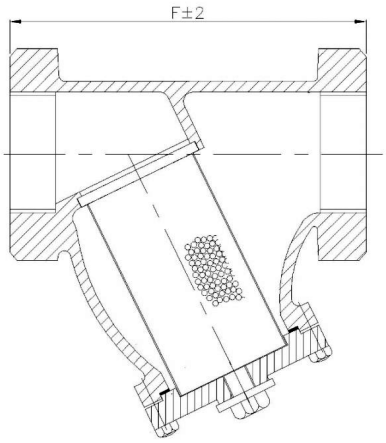

Notes
1. Product images are for illustration purposes only. Actual product may vary.
2. Actual dimensions may change over time, due to continual design improvements. Please confirm before placing order.

Sant Valves Pvt. Ltd.
G.T.Road Bye Pass,
Jalandhar – 144012. Punjab. INDIA

https://www.santvalves.com

Phone : +91 181 5084693
Fax: +91 181 5062270
Email : info@santvalves.com

SANT VALVES
SINCE 1953

I.B.R · ISI · UL LISTED · FM APPROVED

ISO 9001 CERTIFIED COMPANY

CI-8 Cast Iron Single Post High Lift Safety Valve (IBR Approved)

Product Description

HSN 84814000

Product : 'SANT' Cast Iron Single Post High Lift Safety Valve
Type of Pattern : Right Angle
Body Material cum Standard : Cast Iron IBR 86 to 93 Gr.A
Description : Spring Loaded Hi Lift
Type of Seat : Renewable seat
Type of Disc : Renewable disc
Trim : SS AISI-410 / Monel
End Details : Inlet Flange to BS:10 Table F, Outlet Flange to BS:10 Table D

Testing & Certification

Hydraulic Test Pressure : 21.09Kg/cm²g (300 Psig.) Hyd.
Steam Test Pressure : 10.54Kg/cm²g (150 Psig.)
Working Pressure : Max BOP 150 Psig.(10.54Kg/cm²g) at 220° C Steam

Test Certificate in Form lll-C as per IBR is furnished with every supply.

Application

Steam

Materials of Construction

Components	Materials	Specifications
Body, Spring Chamber, Cover, Spring Discs, Cap and Easing Lever	Cast Iron	IBR 86 to 93 Gr.A
Body Seat Ring, Valve Disc	Cast Monel Metal	Ni-Cu Alloy
Bushes, Cotter, Adjusting Screw, Regulating Ring with Ring & Screw	Bronze	IBR 282(a)(iv) Gr.B
Gasket	Compressed Asbestos Fibre	IS:2712 Gr.C
Fasteners	Mild Steel	—
Spring	Spring Steel	IBR 307-314

Dimensions (in mm)

Nominal Size	Nominal Size (Inches)	A±1/16 (Inches)	B±1/16 (Inches)	H (approx)
25	1	3 1/2	4 1/4	442
32	1.1/4	3 3/4	4 3/4	448
40	1.1/2	4	4 3/4	505
50	2	4 3/4	5 1/2	546

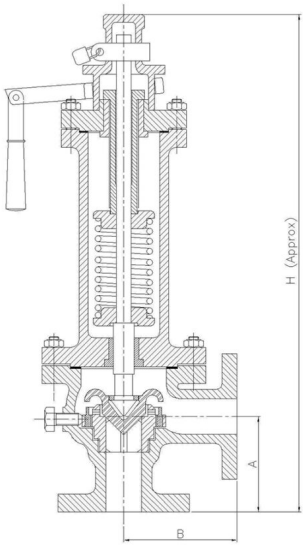

Notes
1. Product images are for illustration purposes only. Actual product may vary.
2. Actual dimensions may change over time, due to continual design improvements. Please confirm before placing order.

Sant Valves Pvt. Ltd.
G.T.Road Bye Pass,
Jalandhar – 144012. Punjab. INDIA

https://www.santvalves.com

Phone : +91 181 5084693
Fax: +91 181 5062270
Email : info@santvalves.com

SANT VALVES
SINCE 1953

ISO 9001 CERTIFIED COMPANY

CI-9 Cast Iron Double Post High Lift Safety Valve (IBR Approved)

Product Description

HSN 8481400

Product : ‘SANT’ Cast Iron Double Post High Lift Safety Valve
Body Material cum Standard : Cast Iron IBR 86 to 93 Gr.A
Description : Spring Loaded Hi Lift
Type of Seat : Renewable seat
Type of Disc : Renewable disc
Trim : SS AISI-410 / Monel
End Details : Inlet Flange to BS:10 Table F, Outlet Flange to BS:10 Table D

Testing & Certification

Hydraulic Test Pressure : 21.09Kg/cm²g (300 Psig.) Hyd.
Steam Test Pressure : 10.54Kg/cm²g (150 Psig.)
Working Pressure : Max BOP 150 Psig.(10.54Kg/cm²g) at 220° C Steam

Test Certificate in Form lll-C as per IBR is furnished with every supply.

Application

Steam

Materials of Construction

Components	Materials	Specifications
Body, Spring Chamber, Cover, Spring Discs, Cap and Easing Lever	Cast Iron	IBR 86 to 93 Gr.A
Body Seat Ring, Valve Disc	Cast Monel Metal	Ni-Cu Alloy
Bushes, Cotter, Adjusting Screw, Regulating Ring with Ring & Screw	Bronze	IBR 282(a)(iv) Gr.B
Gasket	Compressed Asbestos Fibre	IS:2712 Gr.C
Fasteners	Mild Steel	—
Spring	Spring Steel	IBR 307-314

Dimensions (in mm)

Nominal Size	Nominal Size (Inches)	A (Inches)	B (Inches)	C (Inches)	D (Inches)	T (Inches)	H (mm)
25	1	1 1/2	1 1/2	6	5 1/2	5/8	486
40	1 1/2	2 1/4	2 1/2	6 1/2	7 1/4	7/8	570
50	2	2 7/8	3	7 1/2	8	7/8	585

Notes
1. Product images are for illustration purposes only. Actual product may vary.
2. Actual dimensions may change over time, due to continual design improvements. Please confirm before placing order.

Sant Valves Pvt. Ltd.
G.T.Road Bye Pass,
Jalandhar – 144012. Punjab. INDIA
https://www.santvalves.com
Phone : +91 181 5084693
Fax: +91 181 5062270
Email : info@santvalves.com

SANT VALVES
SINCE 1953

ISO 9001 CERTIFIED COMPANY

CI-10 Cast Iron Pressure Reducing Valve Pilot-Operated (IBR Approved)

Product Description

HSN 84811000

Product : ‘SANT’ Cast Iron Pilot-Operated Pressure Reducing Valve
Type of Pattern : Straight Type
Body Material cum Standard : Cast Iron IBR 86 to 93 Gr.A
Description : Pilot operated R-type Outlet pressure range available 5/60, 20/80, 40/125 Psig
Trim : SS AISI-410 / Monel
End Details : Flanges as per BS 10 Table F, FF drilled

Testing & Certification

Hydraulic Test Pressure : 21.09Kg/cm²g (300 Psig.) Hyd.
Working Pressure : Max BOP 10.54Kg/cm²g.(150 Psig) at 220°C Steam

Test Certificate in Form lll-C as per IBR is furnished with every supply.

Application

Steam

Materials of Construction

Components	Materials	Specifications
Body, Bonnet, Bottom Cover, Spring Discs	Cast Iron	IBR 86 to 93 Gr.A
Diaphragm Cover, Adjusting Screw, Plugs, Ring Guide	Bronze	IBR 282(a)(iv) Gr.B
Diaphragm	Stainless Steel	AISI-304
Spring	Spring Steel	IBR 307 to 314
Nipples, Pilot Valve	Stainless Steel	AISI-410
Gasket	Compressed Asbestos Fiber	IS:2712 Gr.C
Piston Rings	Manganese Bronze	—
Body Seat Ring, Main Valve, Liner	S.S. / Cast Monel	AISI-410 / Ni-Cu Alloy
Strainers	S.S.	AISI304
Fasteners	Mild Steel	—
Cap	Aluminium Casting	—

Dimensions (in mm)

Nominal Size	Nominal Size (Inches)	F	A	B±2
25	1	124±1	300	86
32	1.1/4	150±1	330	92
40	1.1/2	150±1	330	95
50	2	204±2	410	125

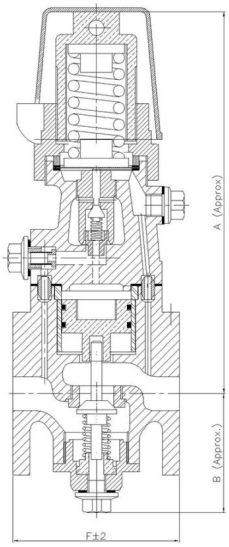

Sant Valves Pvt. Ltd.
G.T.Road Bye Pass,
Jalandhar – 144012. Punjab. INDIA

https://www.santvalves.com

Phone : +91 181 5084693
Fax: +91 181 5062270
Email : info@santvalves.com

SANT VALVES
SINCE 1953

I.B.R LISTED FM APPROVED

ISO 9001 CERTIFIED COMPANY

CI-11 Cast Iron Vertical Inverted Steam Trap Bucket Type (IBR Approved)

Product Description

HSN 84818030

Product : ‘SANT’ Cast Iron Vertical Inverted Bucket Type Steam Trap
Type of Pattern : Vertical
Body Material cum Standard : Cast Iron IBR 86 to 93 Gr.A
Description : Bolted cover
Trim : SS AISI-304
End Details : Inlet Female BSP Parallel threads to BS 21.

Testing & Certification

Hydraulic Test Pressure : 300 Psig. Hyd.
Working Pressure : Max BOP 150 Psig. at 220°C Steam

Test Certificate in Form lll-C as per IBR is furnished with every supply.

Application

Water	Steam

Materials of Construction

Components	Materials	Specifications
Body, Bonnet	Cast Iron	IBR 86 to 93 Gr.A
Syphon Pipe	Mild Steel	—
Bucket & other Trim Material	Stainless Steel	AISI-410/AISI-304
Gasket	Compressed Asbestos Fiber	IS:2712 Gr.C
Fasteners	Mild Steel	—

Dimensions (in mm)

Nominal Size	Nominal Size (Inches)	F	D±2
15	1/2	175	108
20	3/4	220	133
25	1	280	187
40	1.1/2	400	238
50	2	455	286

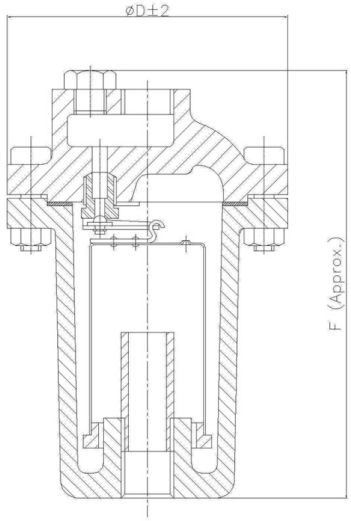

Notes
1. Product images are for illustration purposes only. Actual product may vary.
2. Actual dimensions may change over time, due to continual design improvements. Please confirm before placing order.

Sant Valves Pvt. Ltd.
G.T.Road Bye Pass,
Jalandhar – 144012. Punjab. INDIA

https://www.santvalves.com

Phone : +91 181 5084693
Fax: +91 181 5062270
Email : info@santvalves.com

SANT VALVES
SINCE 1953

I.B.R LISTED FM APPROVED

ISO 9001 CERTIFIED COMPANY

CI-13 Cast Iron Gate Valve All Iron, Screwed

Product Description

HSN 84818030

Product : ‘SANT’ Cast Iron Gate Valve (All Iron)
Type of Pattern : Clip Pattern
Body Material cum Standard : Cast Iron IS:210 Gr.FG200
Description : Clamped Bonnet, Inside Screw, Rising Stem
Type of Seat : Integral seat
Type of Disc : Solid Wedge
Gland Packing: Expanded Pure Flexible Graphite
End Details : Screwed Female BSP Parallel threads to BS 21.

Testing & Certification

Body Test Pressure : 300 Psig. Hyd.
Steam Test Pressure : 200 Psig. Hyd.

Our Works’ Test Certificate is furnished with every supply.

Application

Water	Oil

Materials of Construction

Components	Materials	Specifications
Body, Bonnet, Wedge, Gland, Gland Nut & Handwheel	Cast Iron	IS:210 Gr.FG200
Stem, Fasteners	Mild Steel	IS:226
Gasket	Compressed Asbestos Fibre	IS:2712 Gr.C
Nut & Washer for Handwheel	Mild Steel	—
Gland Packing	Expanded Pure Flexible Graphite	—

Dimensions (in mm)

Nominal Size	Nominal Size (Inches)	F	H (Approx.)	ØW (Approx.)
15	1/2	54±2	155	55
20	3/4	59±2	170	70
25	1	64±2	220	78
32	1.1/4	92±2	225	78
40	1.1/2	83±2	265	78
50	2	93±2	335	105
65	2.1/2	123±2	370	127
80	3	142±2	410	150

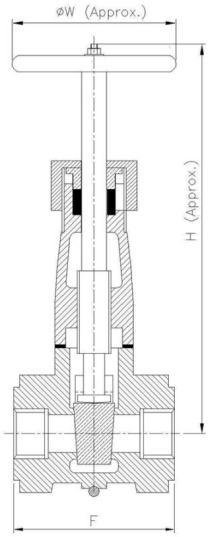

Notes
1. Product images are for illustration purposes only. Actual product may vary.
2. Actual dimensions may change over time, due to continual design improvements. Please confirm before placing order.

Sant Valves Pvt. Ltd.
G.T.Road Bye Pass,
Jalandhar – 144012. Punjab. INDIA
https://www.santvalves.com
Phone : +91 181 5084693
Fax: +91 181 5062270
Email : info@santvalves.com

SANT VALVES
SINCE 1953

I.B.R | ISI | UL LISTED | FM APPROVED

ISO 9001 CERTIFIED COMPANY

CI-14 Cast Iron Gate Valve G.M Parts, Screwed

Product Description

HSN 84818030

Product : ‘SANT’ Cast Iron Gate Valve
Type of Pattern : Clip Pattern
Body Material cum Standard : Cast Iron IS:210 Gr.FG200
Description : Clamped Bonnet, Inside Screw, Rising Stem
Type of Seat : Renewable seat
Type of Disc : Solid Wedge
Trim : Cu-Alloy
Gland Packing : Expanded Pure Flexible Graphite
End Details : Screwed Female BSP Parallel threads to BS 21.

Testing & Certification

Body Test Pressure : 300 Psig. Hyd.
Steam Test Pressure : 200 Psig. Hyd.

Our Works’ Test Certificate is furnished with every supply.

Application

Water	Oil

Materials of Construction

Components	Materials	Specifications
Body, Bonnet & Handwheel	Cast Iron	IS:210 Gr.FG200
Body Seat Rings, Wedge, Gland & Gland Nut	Gun Metal	IS:318 Gr.LTB2
Stem	Forged Brass	IS:6912 FLB
Gasket	Compressed Asbestos Fibre	IS:2712 Gr.C
Nut & Washer for Handwheel, Fasteners	Mild Steel	—
Gland Packing	Expanded Pure Flexible Graphite	—

Dimensions (in mm)

Nominal Size	Nominal Size (Inches)	F	H (Approx.)	ØW (Approx.)
15	1/2	64±2	175	65
20	3/4	70±2	190	70
25	1	83±2	190	70
32	1.1/4	95±2	200	95
40	1.1/2	100±2	215	95
50	2	120±2	265	127
65	2.1/2	127±2	300	127
80	3	147±2	370	150

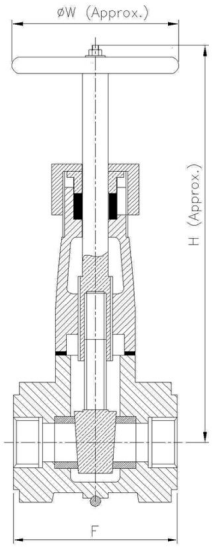

Notes
1. Product images are for illustration purposes only. Actual product may vary.
2. Actual dimensions may change over time, due to continual design improvements. Please confirm before placing order.

Sant Valves Pvt. Ltd.
G.T.Road Bye Pass,
Jalandhar – 144012. Punjab. INDIA
https://www.santvalves.com
Phone : +91 181 5084693
Fax: +91 181 5062270
Email : info@santvalves.com

SANT VALVES
SINCE 1953

ISO 9001 CERTIFIED COMPANY

CI-16B Cast Iron Y Type Strainer Flanged

Product Description

HSN 84818030

Product : ‘SANT’ Cast Iron Y Type Strainer
Type of Pattern : Y Type
Pressure Rating : PN16
Body Material cum Standard : Cast Iron IS:210 Gr.FG200
Description : Bolted Cover
Screen : SS AISI-304 having 1.2mm perforation
End Details : Flanges as per BS 10 Table F undrilled

Testing & Certification

Body Test Pressure : 24 kg/cm² Hyd.
Working Test Pressure : 16 kg/cm² Hyd.

Our Works’ Test Certificate is furnished with every supply.

Application

Water

Materials of Construction

Components	Materials	Specifications
Body, Cover	Cast Iron	IS:210 Gr.FG200
Screen	Stainless Steel	AISI-304
Gasket	Compressed Asbestos Fiber	—
Drain Plug	Stainless Steel	AISI-410
Studs And Nuts	M.S.	—

Dimensions (in mm)

Nominal Size	Nominal Size (Inches)	F	D	T	H (Approx)
25	1	140±2	120.7	12.7	110
32	1 1/4	155±2	133.5	15.9	120
40	1 1/2	165±2	139.7	15.9	140
50	2	185±2	165.1	19.1	160
65	2 1/2	206±2	184.2	19.1	180
80	3	255±2	203.2	19.1	210
100	4	295±2	228.6	22.2	255
125	5	350±2	279.4	25.4	285
150	6	385±2	304.8	25.4	310
200	8	475±2	368.3	28.6	415
250	10	560±2	431.8	28.6	500
300	12	660±2	489	31.8	600

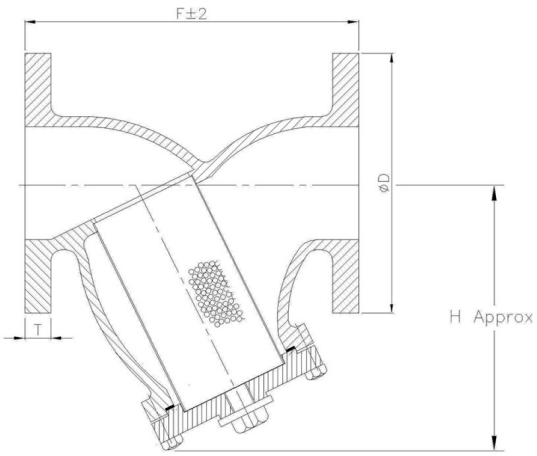

Notes
1. Product images are for illustration purposes only. Actual product may vary.
2. Actual dimensions may change over time, due to continual design improvements. Please confirm before placing order.

Sant Valves Pvt. Ltd.
G.T.Road Bye Pass,
Jalandhar – 144012. Punjab. INDIA
https://www.santvalves.com
Phone : +91 181 5084693
Fax: +91 181 5062270
Email : info@santvalves.com

SANT VALVES
SINCE 1953

ISO 9001 CERTIFIED COMPANY

CI-16 Cast Iron Y Type Strainer Screwed

Product Description

HSN 84818030

Product : ‘SANT’ Cast Iron Y Type Strainer
Type of Pattern : Y Type
Body Material cum Standard : Cast Iron IS:210 Gr.FG200
Description : Screwed in cover
Trim : SS AISI-304 Screen having 1.2mm perforation
End Details : Screwed Female BSP Parallel threads to BS 21.

Testing & Certification

Body Test Pressure : 24 Kg/cm²g
Working Pressure : 16 Kg/cm²g
Max Working Temperature: 225°C

Our Works’ Test Certificate is furnished with every supply.

Application

Water

Materials of Construction

Components	Materials	Specifications
Body, Cover	Cast Iron	IS:210 Gr.FG200
Screen	Stainless Steel	S.S. (AISI-304)
Gasket	Compressed Asbestos Fibre	IS:2712 Gr.C

Dimensions (in mm)

Nominal Size	Nominal Size (Inches)	F	H (Approx.)
15	1/2	70±2	55
20	3/4	90±2	60
25	1	125±2	95
32	1.1/4	125±2	105
40	1.1/2	160±2	120
50	2	200±2	160

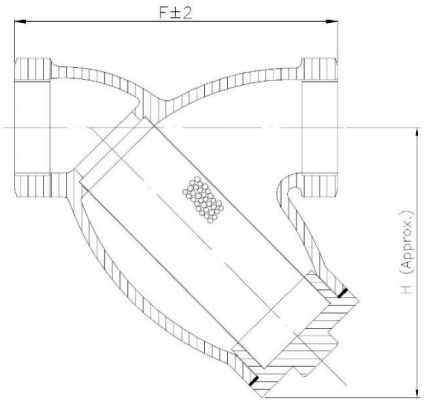

Notes
1. Product images are for illustration purposes only. Actual product may vary.
2. Actual dimensions may change over time, due to continual design improvements. Please confirm before placing order.

Sant Valves Pvt. Ltd.
G.T.Road Bye Pass,
Jalandhar – 144012. Punjab. INDIA
https://www.santvalves.com
Phone : +91 181 5084693
Fax: +91 181 5062270
Email : info@santvalves.com

SANT VALVES
SINCE 1953

ISO 9001 CERTIFIED COMPANY

CI-17 Cast Iron Ball Valve Class 125, Screwed (ISI Marked)

Product Description

HSN 84818030

Product : 'SANT' Cast Iron Ball Valve
Product Standard : IS:9890 Class 125
Type of Pattern : Straight
Body Material cum Standard : Cast Iron IS:210 Gr.FG220
Description : Two piece design
Type of Seat : Renewable Teflon
Trim : Stem: SS AISI-410, Ball: SS AISI-304
Gland Packing : Teflon Rings
End Details : Screwed female Parallel threads as per IS:554

NOTE : Cover will be screwed in type for 50mm valve size & below

Testing & Certification

Body Test Pressure : 300 Psig. Hyd.
Seat Test Pressure : 220 Psig. Hyd., 100 Psig. Air

Our Works' Test Certificate is furnished with every supply.

Application

Water	Oil	Gas

Materials of Construction

Components	Materials	Specifications
Body	Cast Iron	IS:210 Gr.FG220
Ball	Stainless Steel	AISI-304
Spindle	Stainless Steel	AISI-410
Body Seats & Gland Seals	Teflon	PTFE
Stopper, Gland Nut, Handle & Fasteners	Mild Steel	IS:2062:1992
Hand Sleeve	PVC	—

Dimensions (in mm)

Nominal Size	Nominal Size (Inches)	F	LL (Approx.)
15	1/2	72±2	135
20	3/4	87±2	135
25	1	100±2	160
32	1.1/4	121±2	160
40	1.1/2	121±2	230
50	2	135±2	230
65	2.1/2	151±2	260
80	3	172±2	260
100	4	217±2	380

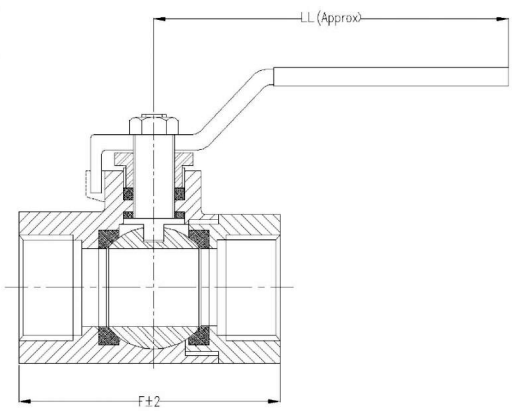

Notes
1. Product images are for illustration purposes only. Actual product may vary.
2. Actual dimensions may change over time, due to continual design improvements. Please confirm before placing order.

Sant Valves Pvt. Ltd.
G.T.Road Bye Pass,
Jalandhar – 144012. Punjab. INDIA

https://www.santvalves.com

Phone : +91 181 5084693
Fax: +91 181 5062270
Email : info@santvalves.com

SANT VALVES
SINCE 1953

ISO 9001 CERTIFIED COMPANY

CI-18 Cast Iron Ball Valve Class 125, Flanged (ISI Marked)

Product Description

HSN 84818030

Product : ‘SANT’ Cast Iron Ball Valve
Product Standard : IS:9890 Class 125
Body Material cum Standard : Cast Iron IS:210 Gr.FG220
Description : Three piece design
Type of Seat : Renewable Teflon
Trim : Stem: SS AISI-410 Stainless Steel, Ball: SS AISI-304
Gland Packing : Teflon Rings
End Details : Flanges as per IS:3516-1966 undrilled/B.S.10 Table F

Testing & Certification

Body Test Pressure : 300 Psig. (21 bar g) Hyd.
Seat Test Pressure : 220 Psig. (15.4 bar g) Hyd., 100 Psig. (6.9 bar g) Air

Our Works’ Test Certificate is furnished with every supply.

Application

Water	Oil	Gas

Materials of Construction

Components	Materials	Specifications
Body	Cast Iron	IS:210 Gr.FG220
Ball	Stainless Steel	AISI-304
Stem	Stainless Steel	AISI-410
Body Seats & Gland Seals	Teflon	—
Stopper, Gland Nut, Handle & Fasteners	Mild Steel	IS:2062:1992
Hand Sleeve	PVC	—
Gasket	Compressed Asbestos Fibre	—

Dimensions (in mm)

Nominal Size	Nominal Size (Inches)	F	LL (Approx.)
15	1/2	130±2	135
20	3/4	130±2	160
25	1	140±2	170
32	1 1/4	165±2	205
40	1 1/2	165±2	205
50	2	203±2	205
65	2 1/2	222±2	250
80	3	241±2	380
100	4	305±2	380

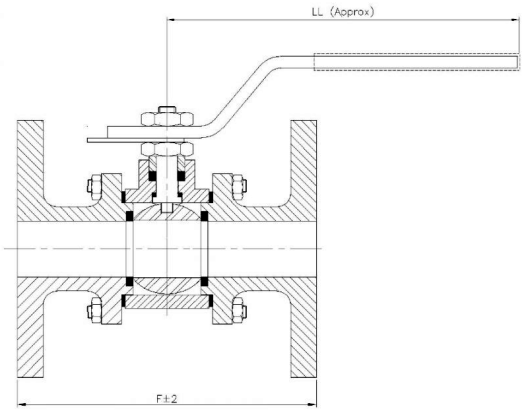

Notes
1. Product images are for illustration purposes only. Actual product may vary.

Sant Valves Pvt. Ltd.
G.T.Road Bye Pass,
Jalandhar – 144012. Punjab. INDIA
https://www.santvalves.com
Phone : +91 181 5084693
Fax: +91 181 5062270
Email : info@santvalves.com

SANT VALVES
SINCE 1953

ISO 9001 CERTIFIED COMPANY

CI-19 C.I. T Strainer Flanged, Class-150

Product Description

HSN 84818030

Product : Sant C.I. 'T' Strainer Flanged
Type of Pattern : Tee Type
Body Material cum standard : Cast Iron IS 210 Gr FG 200
Product Description : Bolted Bonnet
Trim : SS 304 Screen 1.2 perforation
End Details : Flanged as per Class-150

Testing & Certification

Body Test Pressure : 300Psig. (Hyd.)

Our Works' Test Certificate is furnished with every supply.

Materials of Construction

Components	Materials	Specifications
Body, Cover	Cast Iron	IS:210 Gr.FG220
Strainer	Stainless Steel	AISI-304
Gasket	Compressed Asbestos Fiber	—
Drain Plug	Mild Steel	—

Dimensions (in mm)

Nominal Size	Nominal Size (Inches)	F	H (Approx.)
50	2	160±2	115
65	2 1/2	185±2	140
80	3	206±2	150
100	4	254±2	175
150	6	305±2	200
200	8	380±2	245

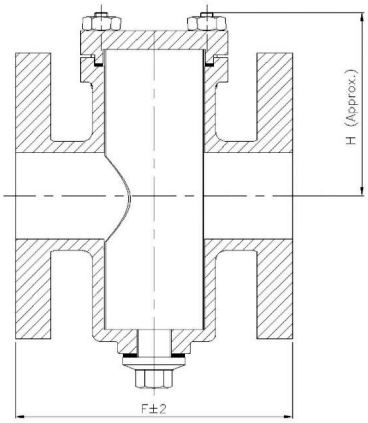

Notes
1. Product images are for illustration purposes only. Actual product may vary.
2. Actual dimensions may change over time, due to continual design improvements. Please confirm before placing order.

Sant Valves Pvt. Ltd.
G.T.Road Bye Pass,
Jalandhar – 144012. Punjab. INDIA

https://www.santvalves.com

Phone : +91 181 5084693
Fax: +91 181 5062270
Email : info@santvalves.com

SANT VALVES
SINCE 1953

ISO 9001 CERTIFIED COMPANY

CR-19A Cast Iron Wedge Sluice Valve Flanged, PN16 / PD Type

Product Description

HSN 84818030

Product : 'SANT' Cast Iron Wedge Gate Sluice Valve
Pressure / Class / Rating : PN 1.6 PD Type
Body Material cum Standard : Cast Iron IS:210 Gr.FG200
Description : Bolted Bonnet, Inside Screw & Non Rising Stem
Type of Seat : Renewable seat
Type of Disc : Solid wedge
Trim : Cu-Alloy Rings, Stem SS AISI-410
Gland Packing : Expanded Pure Flexible Graphite
End Details : Flanges as per IS:1538 FF drilled

Photo Not Available

Testing & Certification

Body Test Pressure : 2.4MPa (Hyd.) Min.
Seat Test Pressure : 1.6MPa (Hyd.) Min.

Our Works' Test Certificate is furnished with every supply.

Application

Water

Materials of Construction

Components	Materials	Specifications
Body, Cap, Gland, Bonnet, Wedge, Handwheel, Stuffing Box	Cast Iron	IS:210 Gr.FG200
Screw	Carbon Steel	IS:1363
Stem	S.S.	AISI-410
Gland Packing	Expanded Pure Flexible Graphite	—
Bolts / Nuts	Carbon Steel	IS:1363 Part 1/3
Body, Seat, Wedge Ring, Wedge Nut	Leaded Tin Bronze	IS:318 Gr.LTB2
Gasket	Rubber	IS:638 Type B

Dimensions (in mm)

Nominal Size	Nominal Size (Inches)	F	H (Approx.)	ØW (Approx.)
50	2	178±2	325	225
65	2.1/2	190±2	360	225
80	3	203±2	400	225
100	4	229±2	450	320
125	5	254±2	485	320
150	6	267±2	545	320
200	8	292±2	675	360
250	10	330±3	770	400
300	12	356±3	875	400

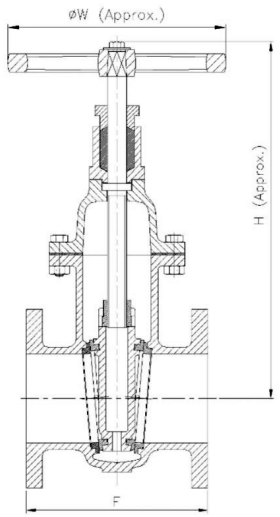

Notes
1. Product images are for illustration purposes only. Actual product may vary.

Sant Valves Pvt. Ltd.
G.T.Road Bye Pass,
Jalandhar – 144012. Punjab. INDIA
https://www.santvalves.com
Phone : +91 181 5084693
Fax: +91 181 5062270
Email : info@santvalves.com

SANT VALVES
SINCE 1953

ISO 9001 CERTIFIED COMPANY

CR-19B Cast Iron Wedge Sluice Valve Flanged, OS & Yoke Type Rising Stem, PN16

Product Description

HSN 84818030

Product : 'SANT' Cast Iron Wedge Gate Sluice Valve
Product Standard : Face To Face as per IS:14846
Pressure / Class / Rating : PN 16 PD Type
Body Material cum Standard : Cast Iron IS:210 Gr.FG200
Description : Bolted Bonnet, Outside Screw & Yoke Type Rising Stem
Type of Seat : Renewable seat
Type of Disc : Solid wedge
Trim : Cu-Alloy Rings, Stem SS AISI-410
Gland Packing : Rubber
End Details : Flanges as per IS:1538 FF drilled

Photo Not Available

Testing & Certification

Body Test Pressure : 2.4MPa (Hyd.)
Seat Test Pressure : 1.6MPa (Hyd.)

Our Works' Test Certificate is furnished with every supply.

Application

Water

Materials of Construction

Components	Materials	Specifications
Body, Handwheel, Wedge, Bonnet, Gland	Cast Iron	IS:210 Gr.FG200
Handwheel Nut, Yoke Sleeve Nut, Stem, Gland, Back Seat Bush	Stainless Steel	AISI-410
Studs & Nuts.	M.S	—
Gland Packing	Rubber	IS:638 Type B
Gasket	Rubber	IS:638 Type B
Body Seat Ring, Wedge Ring	Leaded Tin Bronze	IS:318 Gr.LTB2
Yoke Sleeve	Bronze	—
Bolts / Nuts	Mild Steel	—

Dimensions (in mm)

Nominal Size	Nominal Size (Inches)	F	H (Approx.)	ØW (Approx.)
50	2	178±2	315	178
65	2.1/2	190±2	365	178
80	3	203±2	410	210
100	4	229±2	475	254
125	5	254±2	535	254
150	6	267±2	620	305
200	8	292±2	795	400
250	10	330±3	930	450
300	12	356±3	1100	500

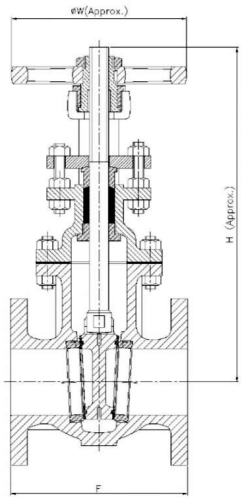

Notes
1. Product images are for illustration purposes only. Actual product may vary.

Sant Valves Pvt. Ltd.
G.T.Road Bye Pass,
Jalandhar – 144012. Punjab. INDIA
https://www.santvalves.com
Phone : +91 181 5084693
Fax: +91 181 5062270
Email : info@santvalves.com

SANT VALVES
SINCE 1953

I.B.R ISI UL LISTED FM APPROVED

ISO 9001 CERTIFIED COMPANY

CR-19 Cast Iron Wedge Sluice Valve Flanged, PN10

Product Description

HSN 84818030

Product : 'SANT' Cast Iron Wedge Gate Sluice Valve
Product Standard : Face to Face & Flange Dimensions as per IS:780
Pressure / Class / Rating : PN 10
Body Material cum Standard : Cast Iron IS:210 Gr.FG200
Description : Bolted Bonnet, Inside Screw & Non Rising Stem
Type of Seat : Renewable seat
Type of Disc : Renewable Solid wedge
Trim : Cu-Alloy Rings, Stem SS AISI-410
Gland Packing : Expanded Pure Flexible Graphite
End Details : Flanges as per IS:780 / IS:1538 FF drilled

Testing & Certification

Body Test Pressure : 1.5MPa (Hyd.)
Seat Test Pressure : 1.0MPa (Hyd.)

Our Works' Test Certificate is furnished with every supply.

Application

Water

Materials of Construction

Components	Materials	Specifications
Body, Wedge, Bonnet, Stuffing Box, Gland	Cast Iron	IS:210 Gr.FG200
Body Seat Ring, Wedge Face Ring, Wedge Nut	Gun Metal / Stainless Steel	IS:318 Gr.LTB2 / AISI-410
Stem	S.S.	AISI-410
Bonnet Gasket	Compressed Asbestos Fibre (Rubber)	3 mm thick
Bonnet Nuts, Bolts Studs, Gland	Carbon Steel	IS:1367 – 1967 CL4.6 / CL4
Gland Packing	Expanded Pure Flexible Graphite	—

Dimensions (in mm)

Nominal Size	Nominal Size (Inches)	F	H (Approx.)	ØW (Approx.)
50	2	215± 2	350	225
65	2.1/2	230± 2	360	225
80	3	230± 2	400	225
100	4	255± 2	435	225
125	5	266± 2	470	225
150	6	280± 2	525	320
200	8	318± 2	610	320
250	10	355± 2	825	400
300	12	380± 2	900	400

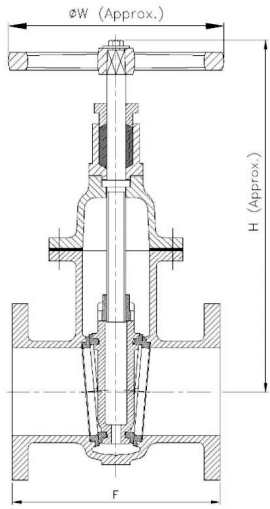

Notes

Sant Valves Pvt. Ltd.
G.T.Road Bye Pass,
Jalandhar – 144012. Punjab. INDIA

https://www.santvalves.com

Phone : +91 181 5084693
Fax: +91 181 5062270
Email : info@santvalves.com

SANT VALVES
SINCE 1953

ISO 9001 CERTIFIED COMPANY

CR-20 Cast Iron Wedge Sluice Valve Flanged, PN10

Product Description

HSN 84818030

Product : ‘SANT’ Cast Iron Wedge Gate Sluice Valve
Product Standard : Flange Dimensions as per BS 10 Table D
Pressure / Class / Rating : PN 10
Body Material cum Standard : Cast Iron IS:210 Gr.FG200
Description : Bolted Bonnet, Inside Screw & Non Rising Stem
Type of Seat : Renewable seat
Type of Disc : Renewable Solid wedge
Trim : Cu-Alloy Rings, Stem SS AISI-410
Gland Packing : Expanded Pure Flexible Graphite
End Details : Flanges as per BS 10 Table D

Testing & Certification

Body Test Pressure : 1.5MPa (Hyd.)
Seat Test Pressure : 1.0MPa (Hyd.)

Our Works’ Test Certificate is furnished with every supply.

Application

Water

Materials of Construction

Components	Materials	Specifications
Body, Wedge, Handwheel, Gland, Stuffing Box, Bonnet, Gland	Cast Iron	IS:210 Gr.FG200
Stem	S.S.	AISI-410
Gland Packing	Expanded Pure Flexible Graphite	—
Body Seat Ring	Gun Metal	IS:318 Gr.LTB2
Gasket	Compressed Asbestos Fibre (Rubber)	—
Screw, Wedge Ring, Bolt & Nut for Gland, Wedge Nut	Carbon Steel	IS:1367

Dimensions (in mm)

Nominal Size	Nominal Size (Inches)	F	H (Approx.)	ØW (Approx.)
50	2	146±2	310	225
65	2.1/2	165±2	340	225
80	3	172±2	360	225
100	4	184±2	395	225
150	6	203±2	520	320
200	8	230±2	590	320

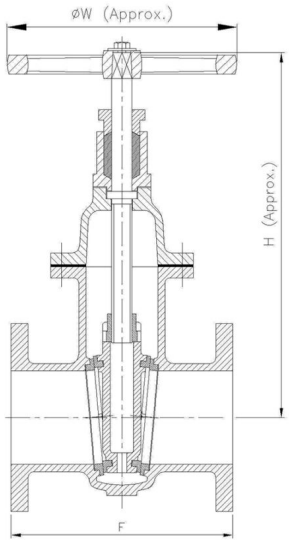

Notes
1. Product images are for illustration purposes only. Actual product may vary.
2. Actual dimensions may change over time, due to continual design improvements. Please confirm before placing order.

Sant Valves Pvt. Ltd.
G.T.Road Bye Pass,
Jalandhar – 144012. Punjab. INDIA
https://www.santvalves.com
Phone : +91 181 5084693
Fax: +91 181 5062270
Email : info@santvalves.com

SANT VALVES
SINCE 1953

I.B.R ISI UL LISTED FM APPROVED

ISO 9001 CERTIFIED COMPANY

CR-21A Cast Iron Butterfly Valve Wafer Type (ISI Marked)

Product Description

HSN 84818030

Product : ‘SANT’ Cast Iron Butterfly Valve
Type of Pattern : Short Pattern
Product Standard : IS:13095
Pressure / Class / Rating : PN 10/PN 16
Body Material cum Standard : Cast Iron IS:210 Gr.FG200
Description : Wafer Type
Type of Seat : Nitrile / EPDM Lining
Type of Disc : SG Iron
Trim : SS AISI-410
End Details : Suitable insertion between Flanges as per BS 10 Table D/E ANSI B 16.1 Cl-125

Testing & Certification

Ratings:

PN10
Body Test Pressure : 1.5MPa (218 Psig) Hyd
Seat Test Pressure : 1.1MPa (160 Psig) Hyd

PN16
Body Test Pressure : 2.4MPa (348 Psig) Hyd
Seat Test Pressure : 1.8MPa (261 Psig) Hyd

Our Works’ Test Certificate is furnished with every supply.

Application

Water

Materials of Construction

Components	Materials	Specifications
Body	Cast Iron	IS:210 Gr.FG260
Disc	S.G. Iron	IS:1865 Gr.SG400/15
Shaft	Stainless Steel	AISI-410/ IS:6603: 12cr12
Seat	Rubber	Nitrile / EPDM Lining
Gear	M.S.	—
Lever / Handwheel	M.S.	—

Dimensions (in mm)

Nominal Size	Nominal Size (Inches)	F	ØD	LL (Approx.)	H (Approx.)
40	1.1/2	33±2	82	175	132
50	2	43±2	95	175	132
65	2.1/2	46±2	106	175	145
80	3	46±2	124	200	170
100	4	52±2	150	260	189
125	5	56±2	173	260	207
150	6	56±2	210	260	232

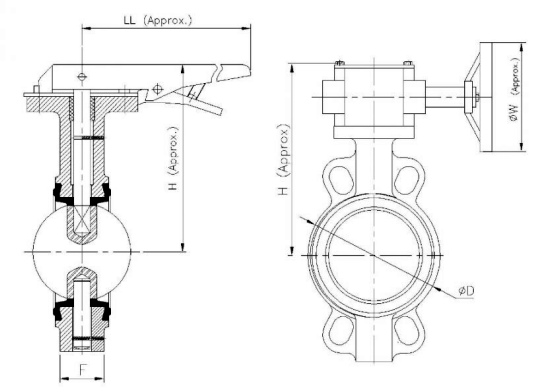

Sant Valves Pvt. Ltd.
G.T.Road Bye Pass,
Jalandhar – 144012. Punjab. INDIA

https://www.santvalves.com

Phone : +91 181 5084693
Fax: +91 181 5062270
Email : info@santvalves.com

SANT VALVES
SINCE 1953

ISO 9001 CERTIFIED COMPANY

CR-21B Cast Iron Butterfly Valve Wafer Type (ISI Marked)

Product Description

HSN 84818030

Product : ‘SANT’ Cast Iron Butterfly Valve
Type of Pattern : Medium Pattern
Product Standard : IS:13095
Pressure / Class / Rating : PN 10/PN 16
Body Material cum Standard : Cast Iron IS:210 Gr.FG200
Description : Wafer Type
Type of Seat : Nitrile / EPDM Lining
Type of Disc : SG Iron
Trim : SS AISI-410
End Details : Suitable insertion between Flanges as per BS 10 Table D/E ANSI B 16.1 Cl-125

Photo Not Available

Testing & Certification

Ratings:

PN10
Body Test Pressure : 1.5MPa (218 Psig) Hyd
Seat Test Pressure : 1.1MPa (160 Psig) Hyd

PN16
Body Test Pressure : 2.4MPa (348 Psig) Hyd
Seat Test Pressure : 1.8MPa (261 Psig) Hyd

Our Works’ Test Certificate is furnished with every supply.

Application

Water

Materials of Construction

Components	Materials	Specifications
Body	Cast Iron	IS:210 Gr.FG260
Disc	S.G. Iron	IS:1865 Gr.SG400/15
Shaft	Stainless Steel	AISI-410/ IS:6603: 12cr12
Seat	Rubber Lining	Nitrile / EPDM Lining
Gear	MS	—
Lever / Handwheel	M.S. / D.I.	—

Dimensions (in mm)

Nominal Size	Nominal Size (Inches)	F	ØD	H (Approx.)	ØW (Approx.)
200	8	60±2	260	335	240
250	10	68±2	315	375	240
300	12	78±3	375	404	285
350	14	92±3	418	475	355
400	16	102±3	470	505	355
450	18	114±3	525	580	450
500	20	127±3	575	625	625
600	24	154±3	693	700	625

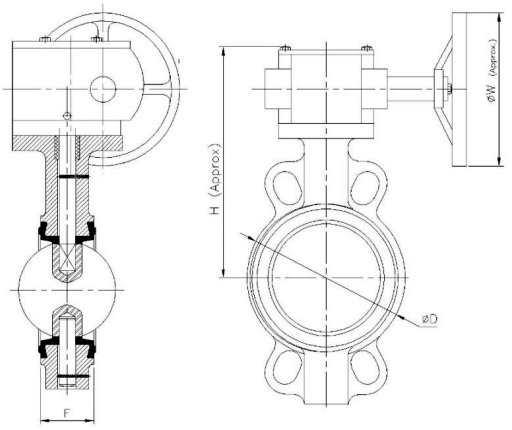

Sant Valves Pvt. Ltd.
G.T.Road Bye Pass,
Jalandhar – 144012. Punjab. INDIA

https://www.santvalves.com

Phone : +91 181 5084693
Fax: +91 181 5062270
Email : info@santvalves.com

SANT VALVES
SINCE 1953

ISO 9001 CERTIFIED COMPANY

CR-22A Cast Iron Butterfly Valve Wafer Type (ISI Marked)

Product Description

HSN 84818030

Product : ‘SANT’ Cast Iron Butterfly Valve
Type of Pattern : Short Pattern
Product Standard : IS:13095
Pressure / Class / Rating : PN 10/PN 16
Body Material cum Standard : Cast Iron IS:210 Gr.FG200
Description : Wafer Type
Type of Seat : Nitrile / EPDM Lining
Type of Disc : SS CF8
Trim : SS AISI-410
End Details : Suitable insertion between Flanges as per BS 10 Table D/E ANSI B 16.1 Class – 125

Note: Worm gear arrangement for 200mm and Above

Testing & Certification

Ratings:

PN10
Body Test Pressure : 1.5MPa (218 Psig) Hyd
Seat Test Pressure : 1.1MPa (160 Psig) Hyd

PN16
Body Test Pressure : 2.4MPa (348 Psig) Hyd
Seat Test Pressure : 1.8MPa (261 Psig) Hyd

Our Works’ Test Certificate is furnished with every supply.

Application

Water

Materials of Construction

Components	Materials	Specifications
Body	Cast Iron	IS:210 Gr.FG260
Disc	Stainless Steel	ASTMA 351 Gr.CF8
Shaft	Stainless Steel	AISI-410/ IS:6603: 12cr12
Seat	Rubber	Nitrile / EPDM Lining
Gear	M.S.	—
Lever / Handwheel	M.S. / D.I.	—

Dimensions (in mm)

Nominal Size	Nominal Size (Inches)	F	ØD	LL (Approx.)	H (Approx.)	ØW (Approx.)
40	1.1/2	33±2	82	200	140	—
50	2	43±2	95	200	145	—
65	2.1/2	46±2	109	200	165	—
80	3	46±2	124	200	175	—
100	4	52±2	150	260	200	—
125	5	56±2	172	260	210	—
150	6	56±2	210	260	245	—

Sant Valves Pvt. Ltd.
G.T.Road Bye Pass,
Jalandhar – 144012. Punjab. INDIA

https://www.santvalves.com

Phone : +91 181 5084693
Fax: +91 181 5062270
Email : info@santvalves.com

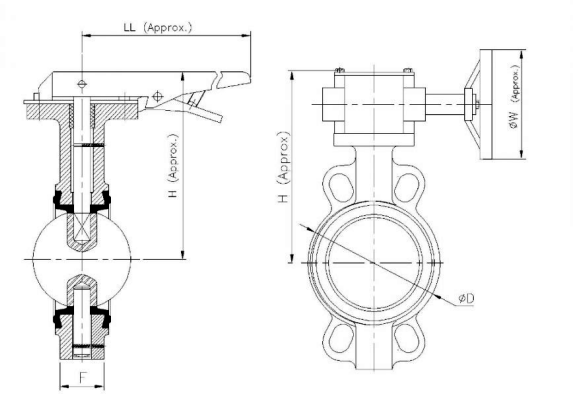

Notes
1. Product images are for illustration purposes only. Actual product may vary.
2. Actual dimensions may change over time, due to continual design improvements. Please confirm before placing order.

SANT VALVES
SINCE 1953

I.B.R ISI UL LISTED FM APPROVED

ISO 9001 CERTIFIED COMPANY

CR-22B Cast Iron Butterfly Valve Wafer Type (ISI Marked)

Product Description

HSN 84818030

Product : 'SANT' Cast Iron Butterfly Valve
Type of Pattern : Medium Pattern
Product Standard : IS:13095
Pressure / Class / Rating : PN 10/PN 16
Body Material cum Standard : Cast Iron IS:210 Gr.FG200
Description : Wafer Type
Type of Seat : Nitrile / EPDM Lining
Type of Disc : SS CF8
Trim : SS AISI-410
End Details : Suitable insertion between Flanges as per BS 10 Table D/E ANSI B 16.1 Class – 125

Photo Not Available

Testing & Certification

Ratings:

PN10
Body Test Pressure : 1.5MPa (218 Psig) Hyd
Seat Test Pressure : 1.1MPa (160 Psig) Hyd

PN16
Body Test Pressure : 2.4MPa (348 Psig) Hyd
Seat Test Pressure : 1.8MPa (261 Psig) Hyd

Our Works' Test Certificate is furnished with every supply.

Application

Water

Materials of Construction

Components	Materials	Specifications
Body	Cast Iron	IS:210 Gr.FG260
Disc	Stainless Steel	ASTMA 351 Gr.CF8
Shaft	Stainless Steel	AISI-410/ IS:6603: 12cr12
Seat	Rubber	Nitrile / EPDM Lining
Gear	M.S.	—
Lever / Handwheel	M.S. / D.I.	—

Dimensions (in mm)

Nominal Size	Nominal Size (Inches)	F	ØD	H (Approx.)	ØW (Approx.)
200	8	60±2	260	335	240
250	10	68±2	315	375	240
300	12	78±3	375	400	285
350	14	92±3	418	475	355
400	16	102±3	470	505	355
450	18	114±3	525	580	450
500	20	127±3	575	625	625
600	24	154±3	690	700	625

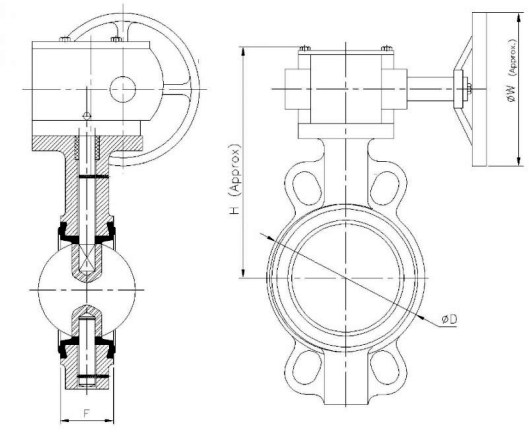

Sant Valves Pvt. Ltd.
G.T.Road Bye Pass,
Jalandhar – 144012. Punjab. INDIA

https://www.santvalves.com

Phone : +91 181 5084693
Fax: +91 181 5062270
Email : info@santvalves.com

SANT VALVES
SINCE 1953

ISO 9001 CERTIFIED COMPANY

CR-23 Cast Iron Butterfly Valve Wafer Type

Product Description

HSN 84813030

Product : ‘SANT’ Cast Iron Butterfly Valve (Lever Operated)
Type of Pattern : Short Pattern
Pressure / Class / Rating : PN 10
Body Material cum Standard : Cast Iron IS:210 Gr.FG200
Description : Wafer Type
Type of Seat : Nitrile / EPDM Lining
Type of Disc : SG Iron
Trim : SS AISI-410
End Details : Suitable insertion between Flanges as per BS 10 Table D/E ANSI B 16.1 Cl-125

Testing & Certification

Body Test Pressure : 1.5MPa (218 Psig) Hyd
Seat Test Pressure : 1.0MPa (145 Psig) Hyd

Our Works’ Test Certificate is furnished with every supply.

Application

Water

Materials of Construction

Components	Materials	Specifications
Locking Screw, Pin, Indexing Plate	S.S.	AISI-410
Bush	PTFE	—
Body	C.I.	IS:210 Gr.FG200
Body Lining	Rubber	Nitrile / EPDM Lining
Disc	S.G. Iron	—
Upper Stem, Lower Stem	S.S.	AISI-410
Bolts & Nuts	Carbon Steel	—
Lever	M.S. / D.I.	—

Dimensions (in mm)

Nominal Size	Nominal Size (Inches)	F	ØD	LL (Approx.)	H (Approx.)
40	1.1/2	33±2	82	175	121
50	2	43±2	95	175	130
65	2.1/2	46±2	106	175	141
80	3	46±2	124	175	145
100	4	52±2	152	260	175
125	5	56±2	173	260	200
150	6	56±2	207	260	210
200	8	60±2	260	350	276
250	10	68±2	315	350	325
300	12	78±3	375	350	360

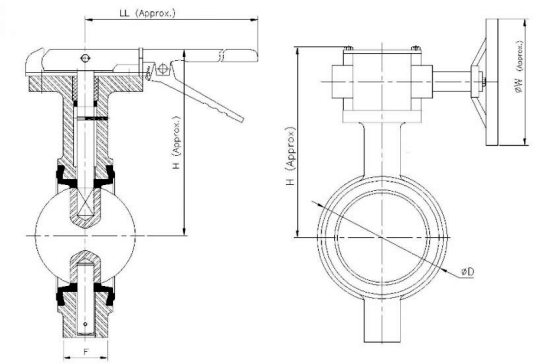

Notes
1. Product images are for illustration purposes only. Actual product may vary.

Sant Valves Pvt. Ltd.
G.T.Road Bye Pass,
Jalandhar – 144012. Punjab. INDIA
https://www.santvalves.com
Phone : +91 181 5084693
Fax: +91 181 5062270
Email : info@santvalves.com

SANT VALVES
SINCE 1953

I.B.R LISTED FM APPROVED

ISO 9001 CERTIFIED COMPANY

CR-24 Cast Iron Butterfly Valve Wafer Type

Product Description

HSN 84813030

Product : ‘SANT’ Cast Iron Butterfly Valve (Lever Operated)
Type of Pattern : Short Pattern
Pressure / Class / Rating : PN 10
Body Material cum Standard : Cast Iron IS:210 Gr.FG200
Description : Wafer Type
Type of Seat : Nitrile / EPDM Lining
Type of Disc : SS
Trim : SS AISI-410
End Details : Suitable insertion between Flanges as per BS 10 Table D/E ANSI B 16.1 Cl-125

Testing & Certification

Body Test Pressure : 1.5MPa (218 Psig) Hyd
Seat Test Pressure : 1.0MPa (145 Psig) Hyd

Our Works’ Test Certificate is furnished with every supply.

Application

Water

Materials of Construction

Components	Materials	Specifications
Locking Screw, Pin, Indexing Plate	S.S.	AISI-410
Bush	PTFE	—
Body	C.I.	IS:210 Gr.FG200
Body Lining	Rubber	Nitrile / EPDM Lining
Disc	S.S.	—
Upper Stem, Lower Stem	S.S.	AISI-410
Bolts & Nuts	Carbon Steel	—
Lever	M.S. / D.I.	—

Dimensions (in mm)

Nominal Size	Nominal Size (Inches)	F	ØD	LL (Approx.)	H (Approx.)
40	1.1/2	33±2	82	175	121
50	2	43±2	95	175	133
65	2.1/2	46±2	106	175	141
80	3	46±2	124	175	145
100	4	52±2	152	260	178
125	5	56±2	173	260	200
150	6	56±2	210	260	210
200	8	60±2	260	350	276
250	10	68±2	315	350	325
300	12	78±3	370	350	360

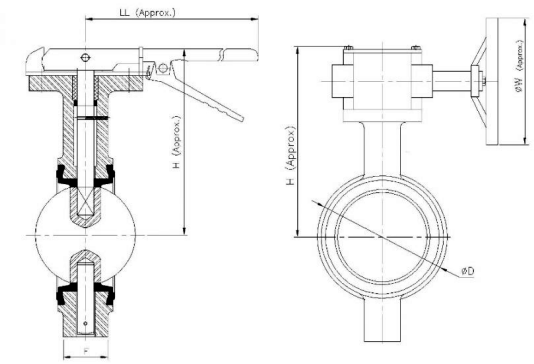

Notes
1. Product images are for illustration purposes only. Actual product may vary.

Sant Valves Pvt. Ltd.
G.T.Road Bye Pass,
Jalandhar – 144012. Punjab. INDIA
https://www.santvalves.com
Phone : +91 181 5084693
Fax: +91 181 5062270
Email : info@santvalves.com

SANT VALVES
SINCE 1953

I.B.R ISI UL LISTED FM APPROVED

ISO 9001 CERTIFIED COMPANY

CR-27A Cast Iron Butterfly Valve Wafer Type

Product Description

HSN 84818030

Product : 'SANT' C.I. Butterfly Valve
Type of Pattern : Wafer Type
Pressure / Class / Rating : PN 20
Body Material cum Standard : Cast Iron to IS:210 Gr.FG200
Description : Wafer Type
Type of Seat : Nitrile / EPDM Lining
Type of Disc : SS Seat CF8
Trim : SS AISI-410
End Details : Suitable insertion between Flanges as per BS 10 Table D/E or ASME B 16.1, Class 125
Note : Gear system will be provided for size above 150mm.

Testing & Certification

Body Test Pressure : 3.0MPa
Seat Test Pressure : 2.2MPa

Our Works' Test Certificate is furnished with every supply.

Application

Water	Oil

Materials of Construction

Components	Materials	Specifications
Lower Stem, Upper Stem	S.S	AISI-410
Index Plate	Carbon Steel	—
Body, Gear box, Handwheel	C.I.	IS:210 Gr.FG200
Body Lining	Rubber	Nitrile / EPDM Lining
Disc	S.S.	CF8
Bolt & Nuts	Steel	SS-304
Lever	M.S. / D.I.	—

Dimensions (in mm)

Nominal Size	Nominal Size (Inches)	F	ØD	H (Approx.)	H1 (Approx.)	LL (Approx.)	ØW (Approx.)
40	1.1/2	33±2	85	145	—	175	—
50	2	43±2	95	150	—	175	—
65	2.1/2	46±2	110	165	—	175	—
80	3	46±2	125	175	—	260	—
100	4	52±2	153	200	—	260	—
125	5	56±2	179	210	—	260	—
150	6	56±2	209	245	—	260	—
200	8	60±2	260	—	335	—	240
250	10	68±2	315	—	375	—	240
300	12	78±3	370	—	480	—	285

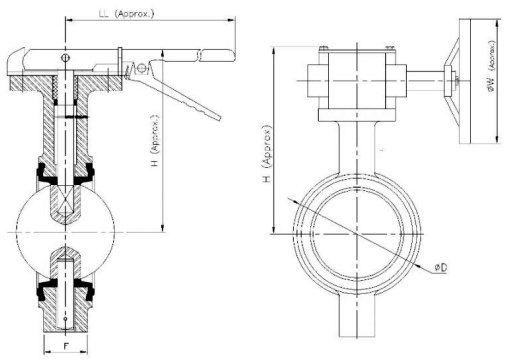

Notes
1. Product images are for illustration purposes only. Actual product may vary.

Sant Valves Pvt. Ltd.
G.T.Road Bye Pass,
Jalandhar – 144012. Punjab. INDIA
https://www.santvalves.com
Phone : +91 181 5084693
Fax: +91 181 5062270
Email : info@santvalves.com

SANT VALVES
SINCE 1953

I.B.R ISI UL LISTED FM APPROVED

ISO 9001 CERTIFIED COMPANY

CR-28C Cast Iron Butterfly Valve Wafer Type, PN 16

Product Description

HSN 84818030

Product : ‘SANT’ Cast Iron Butterfly Valve
Type of Pattern : Short Pattern
Pressure / Class / Rating : PN 16
Body Material cum Standard : Cast Iron IS:210 Gr.FG200
Description : Wafer Type
Type of Seat : EPDM Lining
Type of Disc : CF8M
Stem : SS AISI-304
End Details : Suitable insertion between Flanges as per BS 10 Table D/E ANSI B 16.1 Class 125
Note : Gear system will be provided for size above 150mm.

Testing & Certification

Body Test Pressure : 2.4MPa (348 Psig) Hyd
Seat Test Pressure : 1.6MPa (232 Psig) Hyd

Our Works’ Test Certificate is furnished with every supply.

Application

Water	Oil

Materials of Construction

Components	Materials	Specifications
Pin, Lower Stem, Upper Stem	S.S	AISI-304
Cover Plate	Carbon Steel	—
Body	C.I.	IS:210 Gr.FG200
Body Lining	EPDM	—
Disc	S.S.	CF8M
Screw	Carbon Steel	—
Bolts & Nuts	Carbon Steel	Min UTS 390N/mm2
Lever	M.S. / D.I.	—

Dimensions (in mm)

Nominal Size	Nominal Size (Inches)	F	ØD	H (Approx.)	LL (Approx.)	ØW (Approx.)
40	1.1/2	33±2	85	152	200	—
50	2	43±2	95	171	200	—
65	2.1/2	46±2	110	182	200	—
80	3	46±2	124	192	200	—
100	4	52±2	153	213	260	—
125	5	56±2	174	234	260	—
150	6	56±2	209	248	260	—
200	8	60±2	260	335	—	240
250	10	68±2	315	375	—	240
300	12	78±3	370	404	—	285
350	14	92±3	418	475	—	355
400	16	102±3	470	505	—	355
450	18	114±3	525	580	—	450
500	20	127±3	575	625	—	625
600	24	154±4	693	700	—	625

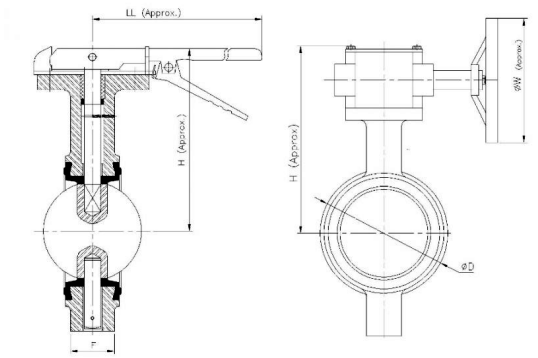

Notes

Sant Valves Pvt. Ltd.
G.T.Road Bye Pass,
Jalandhar – 144012. Punjab. INDIA

https://www.santvalves.com

Phone : +91 181 5084693
Fax: +91 181 5062270
Email : info@santvalves.com

SANT VALVES
SINCE 1953

I.B.R LISTED FM APPROVED

ISO 9001 CERTIFIED COMPANY

CR-31A Cast Iron Reflux Valve (Swing Check Type) Non Return Valve, Straight Type

Product Description

HSN 84813000

Product : ‘SANT’ Cast Iron Reflux Valve Swing Check Type (Non Return Valve)
Pressure Rating: PN16
Product Standard : IS:5312
Type of Pattern : Straight Type
Body Material cum Standard : Cast Iron IS:210 Gr.FG200
Description : Bolted Cover
Type of Seat : Integral / Renewable seat
Type of Disc : Renewable disc
End Details : Flanges as per IS:1538

Testing & Certification

Body Test Pressure : 2.4MPa Hyd.
Seat Test Pressure : 1.6MPa Hyd.

Our Works’ Test Certificate is furnished with every supply.

Application

Water

Materials of Construction

Components	Materials	Specifications
Body, Cover, Hinge, Disc	Cast Iron	IS:210 Gr.FG200
Bolts & Nuts	Carbon Steel	IS:1363 PART 1/3
Gasket	Rubber	IS:638 Type B
Hinge Pin	Stainless Steel	AISI-410
Disc Facing	Rubber	IS:638 Type B
Body Seat Ring	Leaded Tin Bronze	IS:318 Gr.LTB2
Stud & Nut	Carbon Steel	—

Dimensions (in mm)

Nominal Size	Nominal Size (Inches)	F	H (Approx.)
50	2	203±2	135
65	2.1/2	216±2	150
80	3	241±2	160
100	4	292±3	186
125	5	330±3	225
150	6	356±3	240
200	8	495±3	290
250	10	622±4	340
300	12	698±4	398

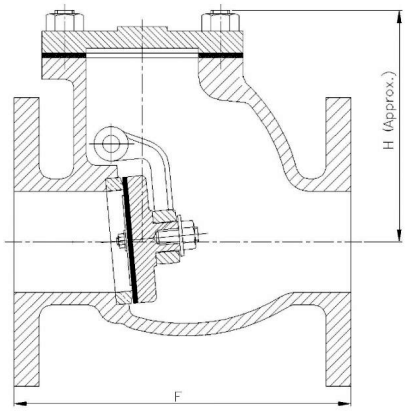

Notes
1. Product images are for illustration purposes only. Actual product may vary.

Sant Valves Pvt. Ltd.
G.T.Road Bye Pass,
Jalandhar – 144012. Punjab. INDIA
https://www.santvalves.com
Phone : +91 181 5084693
Fax: +91 181 5062270
Email : info@santvalves.com

SANT VALVES
SINCE 1953

ISO 9001 CERTIFIED COMPANY

CR-31 Cast Iron Reflux Valve (Swing Check Type) Non Return Valve, Straight Type

Product Description

HSN 84813000

Product : 'SANT' Cast Iron Reflux Valve, Swing Check Type (Non Return Valve)
Pressure Rating: PN10
Product Standard : IS:5312
Type of Pattern : Straight Type
Body Material cum Standard : Cast Iron IS:210 Gr.FG200
Description : Bolted Cover
Type of Seat : Integral / Renewable seat
Type of Disc : Renewable disc
End Details : Flanges as per IS:1538

Photo Not Available

Testing & Certification

Body Test Pressure : 1.5 MPa Hyd.
Seat Test Pressure : 1.0 MPa Hyd.

Our Works' Test Certificate is furnished with every supply.

Application

Water

Materials of Construction

Components	Materials	Specifications
Body, Cover, Hinge, Disc	Cast Iron	IS:210 Gr.FG200
Bolts & Nuts	Carbon Steel	IS:1363 PART 1/3
Gasket	Rubber	IS:638 Type B
Hinge Pin	Stainless Steel	AISI-410
Disc Facing	Rubber	IS:638 Type B
Body Seat Ring	Leaded Tin Bronze	IS:318 Gr.LTB2
Stud & Nut	M.S.	—

Dimensions (in mm)

Nominal Size	Nominal Size (Inches)	F	H (Approx.)
50	2	203±2	135
65	2.1/2	216±2	150
80	3	241±2	160
100	4	292±3	185
125	5	330±3	225
150	6	356±3	240
200	8	495±3	292
250	10	622±4	340
300	12	698±4	398

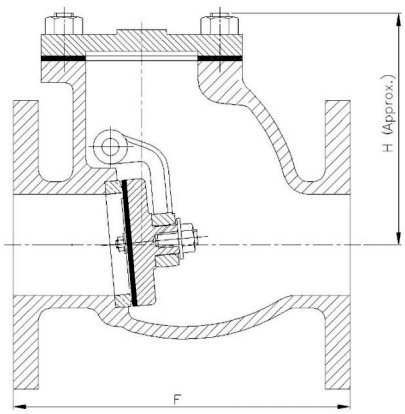

Notes
1. Product images are for illustration purposes only. Actual product may vary.

Sant Valves Pvt. Ltd.
G.T.Road Bye Pass,
Jalandhar – 144012. Punjab. INDIA
https://www.santvalves.com
Phone : +91 181 5084693
Fax: +91 181 5062270
Email : info@santvalves.com

SANT VALVES
SINCE 1953

ISO 9001 CERTIFIED COMPANY

CR-32A Cast Iron Wedge Sluice Valve Flanged, PN 10 PD Type

Product Description

HSN 84818030

Product : 'SANT' Cast Iron Wedge Gate Sluice Valve
Product Standard : Face To Face as per IS:14846
Pressure / Class / Rating : PN 10 PD Type
Body Material cum Standard : Cast Iron IS:210 Gr.FG200
Description : Bolted Bonnet, Outside Screw & Yoke Type Rising Stem
Type of Seat : Renewable seat
Type of Disc : Solid wedge
Trim : Cu-Alloy Rings, Stem SS AISI-410
Gland Packing : Expanded Pure Flexible Graphite
End Details : Flanges as per IS:1538 FF drilled

Photo Not Available

Testing & Certification

Body Test Pressure : 1.5MPa (Hyd.)
Seat Test Pressure : 1.0MPa (Hyd.)

Our Works' Test Certificate is furnished with every supply.

Application

Water

Materials of Construction

Components	Materials	Specifications
Handwheel, Body, Wedge, Bonnet, Gland	Cast Iron	IS:210 Gr.FG200
Handwheel Nut,Yoke Sleeve Nut, Stem, Gland, Back Seat Bush	Stainless Steel	AISI-410
Studs & Nuts	M.S.	—
Gland Packing	Expanded Pure Flexible Graphite	—
Gasket	Compressed Asbestos Fibre	IS:2712
Body Seat Ring, Wedge Ring	Leaded Tin Bronze	IS:318 Gr.LTB2
Yoke Sleeve	Bronze	—
Bolts / Nuts	Carbon Steel	IS:1363 Part 1/3

Dimensions (in mm)

Nominal Size	Nominal Size (Inches)	F	H (Approx.)	ØW (Approx.)
50	2	178±2	315	178
65	2.1/2	190±2	365	178
80	3	203±2	410	210
100	4	229±2	475	254
125	5	254±2	530	254
150	6	267±2	620	305
200	8	292±2	795	400
250	10	330±3	930	450
300	12	356±3	1100	500

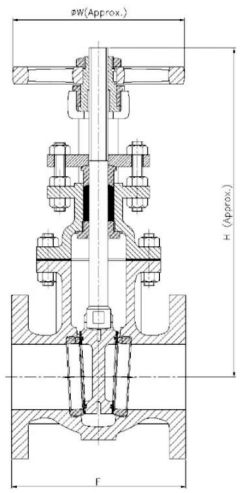

Notes
1. Product images are for illustration purposes only. Actual product may vary.

Sant Valves Pvt. Ltd.
G.T.Road Bye Pass,
Jalandhar – 144012. Punjab. INDIA
https://www.santvalves.com
Phone : +91 181 5084693
Fax: +91 181 5062270
Email : info@santvalves.com

SANT VALVES
SINCE 1953

ISO 9001 CERTIFIED COMPANY

CR-32B Cast Iron Wedge Gate Sluice Valve Flanged, Non Rising Type (ISI Marked)

Product Description

HSN 84818030

Product : ‘SANT’ Cast Iron Sluice Valve
Product Standard : IS:14846
Pressure / Class / Rating : PN 16 PD Type
Body Material cum Standard : Cast Iron IS:210 Gr.FG200
Description : Bolted Bonnet, Inside Screw & Non Rising Stem
Type of Seat : Renewable seat
Type of Disc : Solid wedge
Trim : Cu-Alloy Rings, stem SS (12 Cr.12)
Gland Packing : Rubber ‘O’ Ring
End Details : Flanges as per IS:1538 FF drilled

Testing & Certification

Body Test Pressure : 2.4MPa (Hyd.)
Seat Test Pressure : 1.6MPa (Hyd.)

Our Works’ Test Certificate is furnished with every supply.

Application

Water

Materials of Construction

Components	Materials	Specifications
Body, Cap, Gland, Bonnet, Wedge, Handwheel, Stuffing Box	Cast Iron	IS:210 Gr.FG200
Screw, Bolts, Nuts	Carbon Steel	IS:1363
Stem	S.S.	IS:6603: 12cr12
Gland Packing	Rubber ‘O’ Ring	IS:638 Type B
Body, Seat, Wedge Ring, Wedge Nut	Leaded Tin Bronze	IS:318 Gr.LTB2
Gasket	Rubber	IS:638 Type B

Dimensions (in mm)

Nominal Size	Nominal Size (Inches)	F	H (Approx.)	ØW (Approx.)
50	2	178±2	345	280
65	2.1/2	190±2	360	280
80	3	203±2	400	280
100	4	229±2	450	360
125	5	254±2	480	360
150	6	267±2	545	360
200	8	292±2	675	450
250	10	330±3	770	640
300	12	356±3	875	640

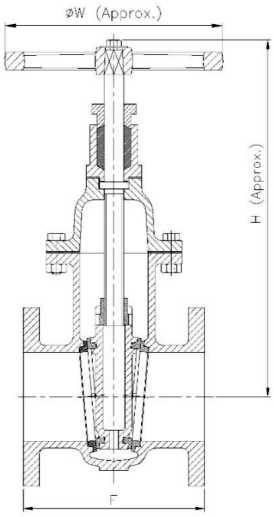

Notes
1. Product images are for illustration purposes only. Actual product may vary.
2. Actual dimensions may change over time, due to continual design improvements. Please confirm before placing order.

Sant Valves Pvt. Ltd.
G.T.Road Bye Pass,
Jalandhar – 144012. Punjab. INDIA
https://www.santvalves.com
Phone : +91 181 5084693
Fax: +91 181 5062270
Email : info@santvalves.com

SANT VALVES
SINCE 1953

ISO 9001 CERTIFIED COMPANY

CR-32 Cast Iron Sluice Valve Flanged, PN 10 / PD Type (ISI Marked)

Product Description

HSN 84818030

Product : ‘SANT’ Cast Iron Sluice Valve
Product Standard : IS:14846
Pressure / Class / Rating : PN 10 PD Type
Body Material cum Standard : Cast Iron IS:210 Gr.FG200
Description : Bolted Bonnet, Inside Screw & Non Rising Stem
Type of Seat : Renewable seat
Type of Disc : Solid wedge
Trim : Cu-Alloy Rings, stem SS (12 Cr.12)
Gland Packing : Rubber ‘O’ Ring
End Details : Flanges as per IS:1538 FF drilled

Testing & Certification

Body Test Pressure : 1.5MPa (Hyd.),
Seat Test Pressure : 1.0MPa (Hyd.)

Our Works’ Test Certificate is furnished with every supply.

Application

Water

Materials of Construction

Components	Materials	Specifications
Body,Cap, Gland, Bonnet, Wedge, Handwheel, Stuffing Box	Cast Iron	IS:210 Gr.FG200
Screw, Bolts, Nuts	Carbon Steel	IS:1363
Stem	S.S.	IS:6603-12cr12
Gland Packing	Rubber ‘O’ Ring	IS:638 Type B
Body, Seat, Wedge Ring, Wedge Nut	Leaded Tin Bronze	IS:318 Gr.LTB2
Gasket	Rubber	IS:638 Type B

Dimensions (in mm)

Nominal Size	Nominal Size (Inches)	F	H (Approx.)	ØW (Approx.)
50	2	178±2	345	225
65	2.1/2	190±2	360	225
80	3	203±2	400	225
100	4	229±2	450	320
125	5	254±2	480	320
150	6	267±2	545	320
200	8	292±2	675	360
250	10	330±3	770	400
300	12	356±3	875	400

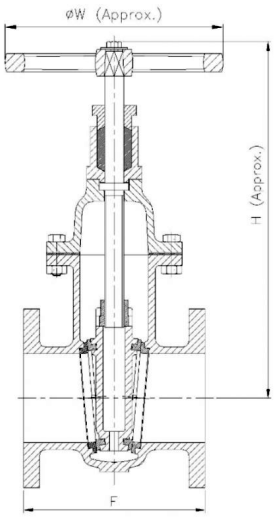

Notes
1. Product images are for illustration purposes only. Actual product may vary.
2. Actual dimensions may change over time, due to continual design improvements. Please confirm before placing order.

Sant Valves Pvt. Ltd.
G.T.Road Bye Pass,
Jalandhar – 144012. Punjab. INDIA
https://www.santvalves.com
Phone : +91 181 5084693
Fax: +91 181 5062270
Email : info@santvalves.com

SANT VALVES
SINCE 1953

ISO 9001 CERTIFIED COMPANY

BFV C.I. Ball Foot Valve Flanged

Product Description

Product : Sant C.I. Ball Foot Valve
Type of Pattern : Y Type Pattern
Pressure/Class /Rating : PN16
Body Material cum standard : Cast Iron to IS:210 FG 200
Type of Ball : MS Rubber Coated
Seat Ring : Nitrile Rubber
Strainer : Cast Iron to IS:210 FG 260
End Details : Flanges as per IS:1538

Testing & Certification

Body Test Pressure : 2.4MPa (Hyd.)
Seat Test Pressure : 1.6MPa (Hyd.)

Our Works' Test Certificate is furnished with every supply.

Photo Not Available

Materials of Construction

Components	Materials	Specifications
Body	Cast Iron	IS:210 FG-200
Ball	M.S. With Rubber Coating	—
Seat Ring	Nitrile Rubber	IS:5192
Gasket	Rubber	IS:638
Ring	Ductile Iron	IS:1865 Gr. 500/7
Strainer	Cast Iron	IS:210 FG-260
Fasteners	Mild Steel	—

Dimensions (in mm)

Nominal Size	B	ØFD	T
80	80	200	21
100	100	220	22
150	150	285	23
200	200	340	24.5
250	250	395	26

Notes
1. Product images are for illustration purposes only. Actual product may vary.
2. Actual dimensions may change over time, due to continual design improvements. Please confirm before placing order.

Sant Valves Pvt. Ltd.
G.T.Road Bye Pass,
Jalandhar – 144012. Punjab. INDIA
https://www.santvalves.com
Phone : +91 181 5084693
Fax: +91 181 5062270
Email : info@santvalves.com

SANT VALVES
SINCE 1953

I.B.R LISTED FM APPROVED

ISO 9001 CERTIFIED COMPANY

BFX C.I. Butterfly Valve Wafer Type, Lever Operated

Product Description

HSN 84818030

Product : Sant C.I. Butterfly Valve Wafer Type (Lever Operated)
Type of Pattern : Replaceable Seat & Disc
Pressure/Class /Rating : PN16
Body Material cum standard : Cast Iron to IS:210 FG 200
Type of Seat : EPDM Lining
Type of Disc : SG Iron
Stem : AISI-410
End Details : Suitable between Flanges ASME B 16.1 Cl-125

Photo Not Available

Testing & Certification

Body Test Pressure : 2.4MPa Hyd.
Seat Test Pressure : 1.6MPa Hyd.

Our Works' Test Certificate is furnished with every supply.

Materials of Construction

Components	Materials	Specifications
Body	Cast Iron	IS:210 Gr.FG200
Replicable Seat	EPDM/Nitrile Rubber	—
Disc	S.G. Iron	—
Stem	S.S.	AISI-410
O Seal Ring	EPDM	—
Bush	PTFE	—
Washer	Mild Steel	—
Bolt	S.S.	—
Circlip	Spring Steel	—
Indexing Plate	M.S. (Galvanized)	—
Lever	M.S. Sheet	—

Dimensions (in mm)

Nominal Size	Nominal Size (Inches)	F	ØD	H (Approx.)	G (Approx.)
50	2	43±2	91	182	204
65	2.1/2	46±2	97	182	204
80	3	46±2	117	182	234
100	4	52±2	149	260	278
125	5	56±2	169	260	309
150	6	56±2	202	260	346
200	8	60±2	250	350	391

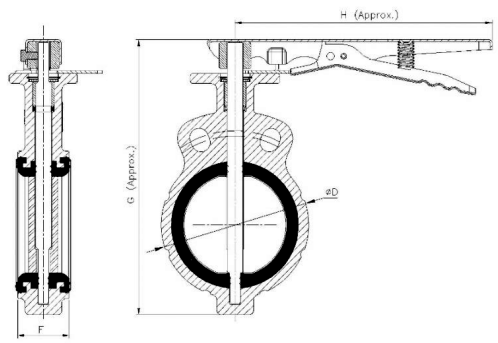

Sant Valves Pvt. Ltd.
G.T.Road Bye Pass,
Jalandhar – 144012. Punjab. INDIA

https://www.santvalves.com

Phone : +91 181 5084693
Fax: +91 181 5062270
Email : info@santvalves.com

SANT VALVES
SINCE 1953

I.B.R LISTED FM APPROVED

ISO 9001 CERTIFIED COMPANY

BFY C.I. Butterfly Valve Wafer Type, Lever Operated

Product Description

HSN 84818030

Product : Sant C.I. Butterfly Valve Wafer Type (Lever Operated)
Type of Pattern : Replaceable Seat & Disc
Pressure/Class /Rating : PN16
Body Material cum standard : Cast Iron to IS:210 FG 200
Type of Lining : EPDM Lining
Type of Disc : SS 304
Stem : AISI-410
End Details : Suitable between Flanges as ASME B 16.1 or Class-125AISI

Photo Not Available

Testing & Certification

Body Test Pressure : 2.4MPa (Hyd.)
Seat Test Pressure : 1.6MPa (Hyd.)

Our Works' Test Certificate is furnished with every supply.

Materials of Construction

Components	Materials	Specifications
Body	Cast Iron	IS:210 Gr.FG200
Replicable Seat	EPDM/Nitrile Rubber	—
Disc	S.S.	AISI-304
Stem	S.S.	AISI-410
O Seal Ring	EPDM	—
Bush	PTFE	—
Washer	Mild Steel	—
Bolt	S.S.	—
Circlip	Spring Steel	—
Indexing Plate	M.S. (Galvanized)	—
Lever	M.S. Sheet	—

Dimensions (in mm)

Nominal Size	Nominal Size (Inches)	F	ØD	H (Approx.)	G (Approx.)
50	2	43±2	91	182	204
65	2.1/2	46±2	97	182	204
80	3	46±2	117	182	234
100	4	52±2	149	260	278
125	5	56±2	169	260	309
150	6	56±2	202	260	346
200	8	60±2	250	350	391

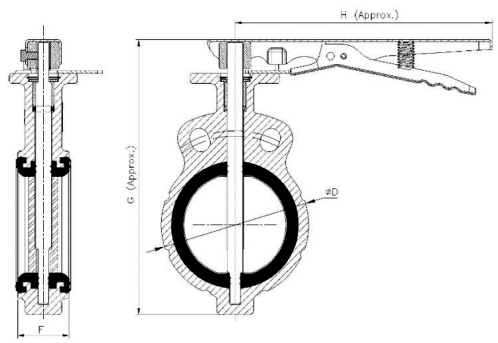

Sant Valves Pvt. Ltd.
G.T.Road Bye Pass,
Jalandhar – 144012. Punjab. INDIA

https://www.santvalves.com

Phone : +91 181 5084693
Fax: +91 181 5062270
Email : info@santvalves.com

SANT VALVES
SINCE 1953

ISO 9001 CERTIFIED COMPANY

CIBFE C.I. Butterfly Valve with Electric Actuator Wafer Type, PN 10/PN 16

Product Description

HSN 84818030

Product : Sant C.I. Butterfly Valve with Electric Actuator
Type of Pattern : Water Type
Pressure/Class/Rating : PN 10/PN 16
Body Material Cum Standard : CI to IS:210 Gr FG200
Type of Lining : EPDM
Type of Disc : SS CF 8
Stem : AISI-410
End Details : Suitable insertion between flanges
as ASME B 16.1 or Class-125

Testing & Certification

Ratings:

PN10
Body Test Pressure : 1.5MPa (218 Psig) Hyd
Seat Test Pressure : 1.1MPa (160 Psig) Hyd

PN16
Body Test Pressure : 2.4MPa (348 Psig) Hyd
Seat Test Pressure : 1.8MPa (261 Psig) Hyd

Materials of Construction

Components	Materials	Specifications
Bush	PTFE	–
Body	Cast Iron	IS:210:Gr.FG200
Upper Stem	SS	AISI-410
Cover Plate	Carbon Steel	–
Body Lining	EPDM/Nitrile Rubber	–
Disc	SS	CF8
Lower Stem	SS	AISI-410
Locking Screw	Steel	–
Bolt & Nuts	Carbon Steel	–
Electrical Actuator	–	–

Dimensions (in mm)

Size	F±2	D
40	33	82
50	43	95
65	46	106
80	46	124
100	52	150
125	56	172
150	56	207
200	60	260
250	68	315
300	78	375

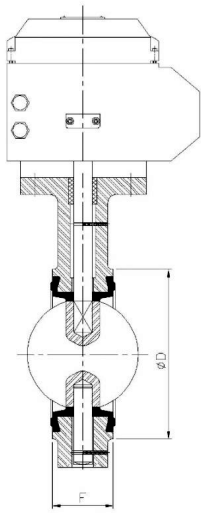

Sant Valves Pvt. Ltd.
G.T.Road Bye Pass,
Jalandhar – 144012. Punjab. INDIA

https://www.santvalves.com

Phone : +91 181 5084693
Fax: +91 181 5062270
Email : info@santvalves.com

SANT VALVES
SINCE 1953

ISO 9001 CERTIFIED COMPANY

CIBFL C.I. Butterfly Valve with Limit Switch Wafer Type, PN 10/PN 16

Product Description

HSN 84818030

Product : Sant C.I. Butterfly Valve with Limit Switch
Type of Pattern : Water Type
Pressure/Class/Rating : PN 10/PN 16
Body Material Cum Standard : CI to IS:210 Gr FG200
Product Description : Wafer Type
Type of Seat : Nitrile/EPDM Lining
Type of Disc : SS Seat CF8
Stem : AISI-410
End Details : Suitable insertion between flanges as per BS 10 Table F/D/E or ASME B 16.1 Class-125

Testing & Certification

Ratings:

PN10
Body Test Pressure : 1.5MPa (218 Psig) Hyd
Seat Test Pressure : 1.1MPa (160 Psig) Hyd

PN16
Body Test Pressure : 2.4MPa (348 Psig) Hyd
Seat Test Pressure : 1.8MPa (261 Psig) Hyd

Materials of Construction

Components	Materials	Specifications
Bush	PTFE	
Body	Cast Iron	IS:210:Gr.FG200
Upper Stem	SS	AISI-410
Cover Plate	Carbon Steel	
Body Lining	EPDM/Nitrile Rubber	
Disc	SS	CF8
Lower Stem	SS	AISI-410
Locking Screw	Steel	
Fastners	Steel	
Lever		IS:14329
Limit Switch		

Dimensions (in mm)

Size	F±2	D	H	LL
40	33	82	132	175
50	43	95	132	175
65	46	106	145	175
80	46	124	170	260
100	52	150	189	260
125	56	174	207	260
150	56	210	232	260
200	60	260	335	260

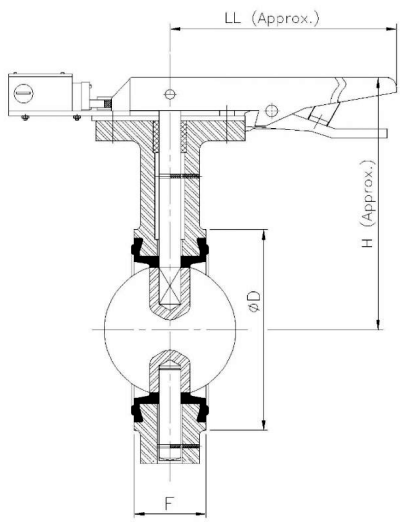

Sant Valves Pvt. Ltd.
G.T.Road Bye Pass,
Jalandhar – 144012. Punjab. INDIA

https://www.santvalves.com

Phone : +91 181 5084693
Fax: +91 181 5062270
Email : info@santvalves.com

SANT VALVES
SINCE 1953

ISO 9001 CERTIFIED COMPANY

CIBFP C.I. Butterfly Valve with Pneumatic Actuator Wafer Type, PN 10/PN 16

Product Description

HSN 84818030

Product : Sant C.I. Butterfly Valve with Pneumatic Actuator
Type of Pattern : Water Type
Pressure/Class/Rating : PN 10/PN 16
Body Material Cum Standard : CI to IS:210 Gr FG200
Product Description : Wafer Type
Type of Seat : Nitrile/EPDM Lining
Type of Disc : Stainless Steel CF8
Stem : AISI-410
End Details : Suitable insertion between flanges as per BS 10 Table F/D/E or ASME B 16.1 Class-125

Testing & Certification

Ratings:

PN10
Body Test Pressure : 1.5MPa (218 Psig) Hyd
Seat Test Pressure : 1.1MPa (160 Psig) Hyd

PN16
Body Test Pressure : 2.4MPa (348 Psig) Hyd
Seat Test Pressure : 1.8MPa (261 Psig) Hyd

Materials of Construction

Components	Materials	Specifications
Bush	PTFE	
Body	Cast Iron	IS:210:Gr.FG200
Upper Stem	SS	AISI-410
Cover Plate	Carbon Steel	
Body Lining	EPDM/Nitrile Rubber	
Disc	SS	CF8
Lower Stem	SS	AISI-410
Locking Screw	Steel	
Bolts & Nuts	Carbon Steel	
Pneumatic Actuator		

Dimensions (in mm)

Size	F±2	D
40	33	82
50	43	95
65	46	106
80	46	124
100	52	150
125	56	174
150	56	210
200	60	260

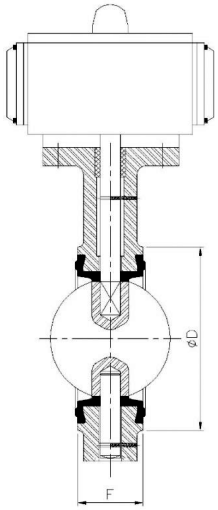

Sant Valves Pvt. Ltd.
G.T.Road Bye Pass,
Jalandhar – 144012. Punjab. INDIA

https://www.santvalves.com

Phone : +91 181 5084693
Fax: +91 181 5062270
Email : info@santvalves.com

SANT VALVES
SINCE 1953

ISO 9001 CERTIFIED COMPANY

IBR-1A Bronze Globe Steam Stop Valve Screwed Ends (IBR Approved)

Product Description

HSN 84818030

Product : ‘SANT’ Bronze Globe Steam Stop Valve
Type of Pattern : Straight Type
Body Material cum Standard : Bronze IBR 282(a)(iv) Gr.B
Description : Screwed in Bonnet, Inside Screw, Rising Stem
Type of Seat : Renewable Seat
Type of Disc : Renewable Disc
Trim : SS AISI-410
Gland Packing : Expanded Pure Flexible Graphite
End Details : Screwed female BSP Taper threads to BS 21

Testing & Certification

Body Test Pressure : 500 Psig.Hyd.
Seat & Back Seat Test Pressure : 500 Psig. Hyd. & 250 Psig. Steam
Working Pressure : Max.BOP 250 Psig.(17.58Kg/cm²)
Maximum Working Temperature: 225°C (435°F)

Test Certificate in Form III-C as per IBR is furnished with every supply.

Application

Water	Oil	Steam

Materials of Construction

Components	Materials	Specifications
Body, Bonnet, Disk Nut, Gland & Gland Nut	Bronze	IBR 282(a)(iv) Gr.B
Body Seat Ring, Valve Disc & Spindle	Stainless Steel	AISI-410
Handwheel	C.I. / D.I.	IBR 86 to 93 Gr.A
Gland Packing	Expanded Pure Flexible Graphite	—
Locking Washer	Brass Sheet	—
Washer & Nut for Handwheel	Mild Steel	—

Dimensions (in mm)

Nominal Size	Nominal Size (Inches)	F	H (Approx.)	ØW(Approx.)
8	1/4	75±1.5	111	70
10	3/8	75±1.5	115	70
15	1/2	83±1.5	125	70
20	3/4	95±1.5	125	70
25	1	111±1.5	152	90
32	1.1/4	133±1.5	172	90
40	1.1/2	152±1.5	181	127
50	2	178±1.5	215	144

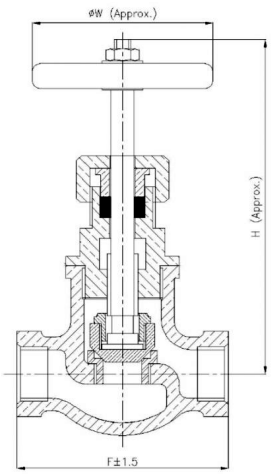

Notes
1. Product images are for illustration purposes only. Actual product may vary.
2. Actual dimensions may change over time, due to continual design improvements. Please confirm before placing order.

Sant Valves Pvt. Ltd.
G.T.Road Bye Pass,
Jalandhar – 144012. Punjab. INDIA
https://www.santvalves.com
Phone : +91 181 5084693
Fax: +91 181 5062270
Email : info@santvalves.com

SANT VALVES
SINCE 1953

I.B.R ISI UL LISTED FM APPROVED

ISO 9001 CERTIFIED COMPANY

IBR-1B Bronze Globe Steam Stop Valve Flanged Ends (IBR Approved)

Product Description

HSN 84818030

Product : ‘SANT’ Bronze Globe Steam Stop Valve
Type of Pattern : Straight Type
Body Material cum Standard : Bronze IBR 282(a)(iv) Gr.B
Description : Screwed in Bonnet, Inside Screw, Rising Stem
Type of Seat : Renewable Seat
Type of Disc : Renewable Disc
Trim : SS AISI-410
Gland Packing : Expanded Pure Flexible Graphite
End Details : Flanges as per BS 10 Table H F.F. undrilled

Testing & Certification

Body Test Pressure : 500 Psig.Hyd.
Seat & Back Seat Test Pressure : 500 Psig. Hyd. & 250 Psig. Steam
Working Pressure : Max.BOP 250 Psig.(17.58Kg/cm²)
Maximum Working Temperature: 225°C (435°F)

Test Certificate in Form III-C as per IBR is furnished with every supply.

Application

Water	Oil	Steam

Materials of Construction

Components	Materials	Specifications
Body, Bonnet, Disc Nut, Gland & Gland Nut	Bronze	IBR 282(a)(iv) Gr.B
Body Seat Ring, Valve Disc & Spindle	Stainless Steel	AISI-410
Handwheel	C.I. / D.I.	IBR 86 to 93 Gr.A
Gland Packing	Expanded Pure Flexible Graphite	—
Locking Washer	Brass Sheet	—
Washer & Nut for Handwheel	Mild Steel	—

Dimensions (in mm)

Nominal Size	Nominal Size (Inches)	F	H (Approx.)	ØW (Approx.)
15	1/2	102±1.5	125	70
20	3/4	114±1.5	125	70
25	1	127±1.5	142	90
32	1.1/4	140±1.5	167	90
40	1.1/2	152±1.5	181	127
50	2	178±1.5	212	144

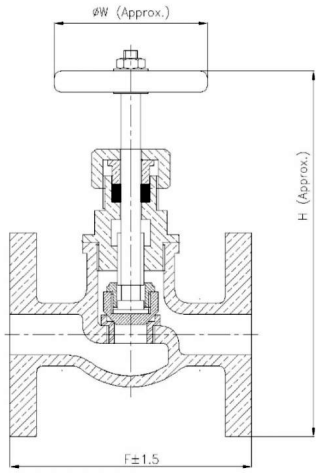

Notes
1. Product images are for illustration purposes only. Actual product may vary.
2. Actual dimensions may change over time, due to continual design improvements. Please confirm before placing order.

Sant Valves Pvt. Ltd.
G.T.Road Bye Pass,
Jalandhar – 144012. Punjab. INDIA
https://www.santvalves.com
Phone : +91 181 5084693
Fax: +91 181 5062270
Email : info@santvalves.com

SANT VALVES
SINCE 1953

I.B.R LISTED FM APPROVED

ISO 9001 CERTIFIED COMPANY

IBR-1C Bronze Globe Steam Stop Valve Flanged Ends (IBR Approved)

Product Description

HSN 84818030

Product : 'SANT' Bronze Globe Steam Stop Valve
Type of Pattern : Straight Type
Body Material cum Standard : Bronze IBR 282(a)(iv) Gr.B
Description : Screwed in Bonnet, Inside Screw, Rising Stem
Type of Seat : Renewable Seat
Type of Disc : Renewable Disc
Trim : SS AISI-410
Gland Packing : Expanded Pure Flexible Graphite
End Details : Flanges as per BS 10 Table F (undrilled)

Testing & Certification

Body Test Pressure : 300 Psig.Hyd.
Seat & Back Seat Test Pressure : 300 Psig. Hyd. & 150 Psig. Steam
Working Pressure : Max.BOP 150 Psig.(10.54Kg/cm²)
Maximum Working Temperature: 225°C (435°F)

Test Certificate in Form III-C as per IBR is furnished with every supply.

Application

Water	Oil	Steam

Materials of Construction

Components	Materials	Specifications
Body, Bonnet, Disc Nut, Gland & Gland Nut	Bronze	IBR 282(a)(iv) Gr.B
Body Seat Ring, Valve Disc & Spindle	Stainless Steel	AISI-410
Handwheel	C.I. / D.I.	IBR 86 to 93 Gr.A
Gland Packing	Expanded Pure Flexible Graphite	—
Locking Washer	Brass Sheet	—
Washer & Nut for Handwheel	Mild Steel	—

Dimensions (in mm)

Nominal Size	Nominal Size (Inches)	F	H (Approx.)	ØW (Approx.)
15	1/2	95±1.5	130	70
20	3/4	108±1.5	130	70
25	1	118±1.5	152	90
32	1.1/4	127±1.5	165	90
40	1.1/2	143±1.5	181	127
50	2	171±1.5	222	144

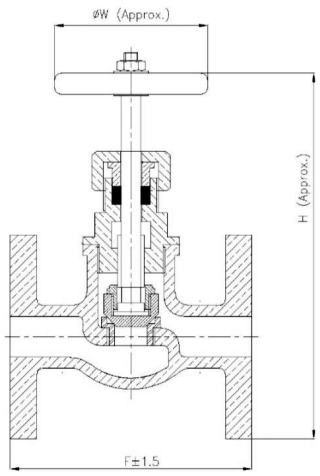

Notes
1. Product images are for illustration purposes only. Actual product may vary.
2. Actual dimensions may change over time, due to continual design improvements. Please confirm before placing order.

Sant Valves Pvt. Ltd.
G.T.Road Bye Pass,
Jalandhar – 144012. Punjab. INDIA
https://www.santvalves.com
Phone : +91 181 5084693
Fax: +91 181 5062270
Email : info@santvalves.com

SANT VALVES
SINCE 1953

ISO 9001 CERTIFIED COMPANY

IBR-2A Bronze Globe Steam Stop Valve OS & Yoke Type, Screwed Ends (IBR Approved)

Product Description

HSN 84818030

Product : 'SANT' Bronze Globe Steam Stop Valve
Type of Pattern : Straight Type
Body Material cum Standard : Bronze IBR 282(a)(iv) Gr.B
Description : Bolted Bonnet, Outside Screw & Yoke Type, Rising Stem
Type of Seat : Renewable Seat
Type of Disc : Renewable Disc
Trim : SS AISI-410
Gland Packing : Expanded Pure Flexible Graphite
End Details : Screwed female BSP Taper threads to BS 21

Testing & Certification

Body Test Pressure : 500 Psig.Hyd.
Seat & Back Seat Test Pressure : 500 Psig. Hyd. & 250 Psig. Steam
Working Pressure : Max.BOP 250 Psig.(17.58Kg/cm²)
Maximum Working Temperature: 225°C (435°F)

Test Certificate in Form III-C as per IBR is furnished with every supply.

Application

Water	Oil	Steam

Materials of Construction

Components	Materials	Specifications
Body, Bonnet, Disc Nut, Gland	Bronze	IBR 282(a)(iv) Gr.B
Stem, Body Seat Ring & Valve Disc	Stainless Steel	AISI-410
Handwheel	C.I. / D.I.	IBR 86 to 93 Gr.A
Gland Packing	Expanded Pure Flexible Graphite	—
Fasteners, Washer & Nut for Handwheel	Mild Steel	—

Dimensions (in mm)

Nominal Size	Nominal Size (Inches)	F	H (Approx.)	ØW (Approx.)
10	3/8	75±1.5	135	70
15	1/2	83±1.5	135	70
20	3/4	95±1.5	135	70
25	1	111±1.5	160	90
32	1.1/4	133±1.5	200	90
40	1.1/2	152±1.5	220	127
50	2	178±1.5	260	144
65	2.1/2	203±1.5	270	178
80	3	254±1.5	325	197

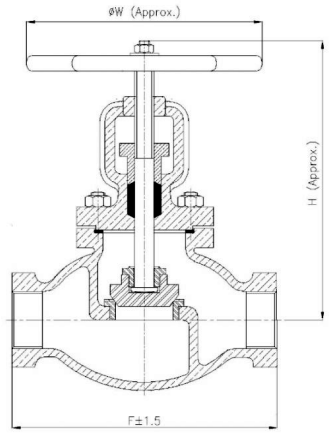

Notes
1. Product images are for illustration purposes only. Actual product may vary.
2. Actual dimensions may change over time, due to continual design improvements. Please confirm before placing order.

Sant Valves Pvt. Ltd.
G.T.Road Bye Pass,
Jalandhar – 144012. Punjab. INDIA
https://www.santvalves.com
Phone : +91 181 5084693
Fax: +91 181 5062270
Email : info@santvalves.com

SANT VALVES
SINCE 1953

ISO 9001 CERTIFIED COMPANY

IBR-2B Bronze Globe Steam Stop Valve OS & Yoke Type, Flanged Ends (IBR Approved)

Product Description

HSN 84818030

Product : 'SANT' Bronze Globe Steam Stop Valve
Type of Pattern : Straight Type
Body Material cum Standard : Bronze IBR 282(a)(iv) Gr.B
Description : Bolted Bonnet, Outside Screw & Yoke Type, Rising Stem
Type of Seat : Renewable Seat
Type of Disc : Renewable Disc
Trim : SS AISI-410
Gland Packing : Expanded Pure Flexible Graphite
End Details : Flanges as per BS 10 Table H F.F. undrilled

Testing & Certification

Body Test Pressure : 500 Psig.Hyd.
Seat & Back Seat Test Pressure : 500 Psig. Hyd. & 250 Psig. Steam
Working Pressure : Max.BOP 250 Psig.(17.58Kg/cm²)
Maximum Working Temperature: 225°C (435°F)

Test Certificate in Form III-C as per IBR is furnished with every supply.

Application

Water	Oil	Steam

Materials of Construction

Components	Materials	Specifications
Body, Bonnet, Disc Nut, Gland	Bronze	IBR 282(a)(iv) Gr.B
Stem, Body Seat Ring & Valve Disc	Stainless Steel	AISI-410
Handwheel	C.I. / D.I.	IBR 86 to 93 Gr.A
Gland Packing	Expanded Pure Flexible Graphite	—
Fasteners, Washer & Nut for Handwheel	Mild Steel	—

Dimensions (in mm)

Nominal Size	Nominal Size (Inches)	F	H (Approx.)	ØW (Approx.)
15	1/2	102±1.5	125	70
20	3/4	114±1.5	125	70
25	1	127±1.5	165	90
32	1.1/4	140±1.5	200	90
40	1.1/2	152±1.5	220	127
50	2	178±1.5	250	144
65	2.1/2	229±1.5	270	178
80	3	267±1.5	325	197
100	4	292±1.5	345	229

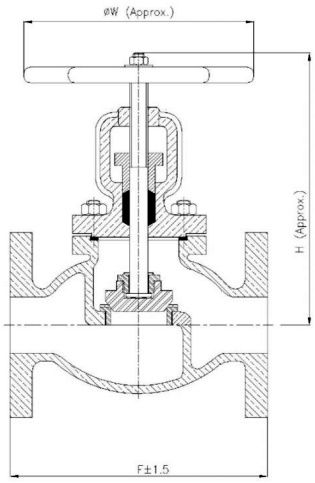

Notes
1. Product images are for illustration purposes only. Actual product may vary.
2. Actual dimensions may change over time, due to continual design improvements. Please confirm before placing order.

Sant Valves Pvt. Ltd.
G.T.Road Bye Pass,
Jalandhar – 144012. Punjab. INDIA

https://www.santvalves.com

Phone : +91 181 5084693
Fax: +91 181 5062270
Email : info@santvalves.com

SANT VALVES
SINCE 1953

ISO 9001 CERTIFIED COMPANY

IBR-2C Bronze Globe Steam Stop Valve OS & Yoke Type, Flanged Ends (IBR Approved)

Product Description

HSN 84818030

Product : ‘SANT’ Bronze Globe Steam Stop Valve
Type of Pattern : Straight Type
Body Material cum Standard : Bronze IBR 282(a)(iv) Gr.B
Description : Bolted Bonnet, Outside Screw & Yoke Type, Rising Stem
Type of Seat : Renewable Seat
Type of Disc : Renewable Disc
Trim : SS AISI-410
Gland Packing : Expanded Pure Flexible Graphite
End Details : Flanges as per BS 10 Table F F.F. undrilled

Testing & Certification

Body Test Pressure : 300 Psig.Hyd.
Seat & Back Seat Test Pressure : 300 Psig. Hyd. & 150 Psig. Steam
Working Pressure : Max.BOP 150 Psig.(10.54Kg/cm²)
Maximum Working Temperature: 225°C (435°F)

Test Certificate in Form III-C as per IBR is furnished with every supply.

Application

Water	Oil	Steam

Materials of Construction

Components	Materials	Specifications
Body, Bonnet, Disc Nut, Gland	Bronze	IBR 282(a)(iv) Gr.B
Stem, Body Seat Ring & Valve Disc	Stainless Steel	AISI-410
Handwheel	C.I. / D.I.	IBR 86 to 93 Gr.A
Gland Packing	Expanded Pure Flexible Graphite	—
Fasteners, Washer & Nut for Handwheel	Mild Steel	—

Dimensions (in mm)

Nominal Size	Nominal Size (Inches)	F	H (Approx.)	ØW (Approx.)
15	1/2	95±1.5	135	70
20	3/4	108±1.5	150	70
25	1	118±1.5	165	90
32	1.1/4	127±1.5	200	90
40	1.1/2	143±1.5	220	127
50	2	171±1.5	250	144
65	2.1/2	225±1.5	270	178
80	3	264±1.5	325	197
100	4	289±1.5	345	229

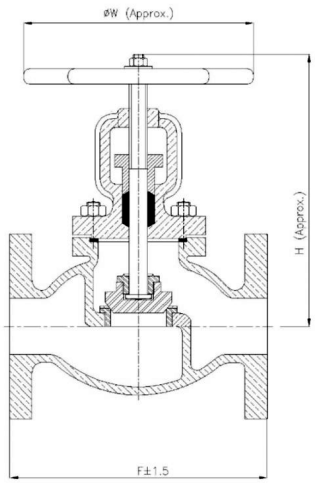

Notes
1. Product images are for illustration purposes only. Actual product may vary.
2. Actual dimensions may change over time, due to continual design improvements. Please confirm before placing order.

Sant Valves Pvt. Ltd.
G.T.Road Bye Pass,
Jalandhar – 144012. Punjab. INDIA
https://www.santvalves.com
Phone : +91 181 5084693
Fax: +91 181 5062270
Email : info@santvalves.com

SANT VALVES
SINCE 1953

I.B.R LISTED FM APPROVED

ISO 9001 CERTIFIED COMPANY

IBR-3A Bronze Horizontal Lift Check Valve Screwed Cover, Screwed Ends (IBR Approved)

Product Description

HSN 84813000

Product : 'SANT' Bronze Horizontal Lift Check Valve
Type of Pattern : Straight Type
Body Material cum Standard : Bronze IBR 282(a)(iv) Gr.B
Description : Screwed in cover
Type of Seat : Renewable Seat
Type of Disc : Renewable Disc
Trim : SS AISI-410
End Details : Screwed female BSP Taper threads to BS 21

Testing & Certification

Body Test Pressure : 500 Psig.Hyd.
Seat Test Pressure : 500 Psig. Hyd. & 250 Psig. Steam
Working Pressure : Max.BOP 250 Psig.(17.58Kg/cm²)
Maximum Working Temperature: 225°C (435°F)

Test Certificate in Form III-C as per IBR is furnished with every supply.

Application

Water	Oil	Steam

Materials of Construction

Components	Materials	Specifications
Body, Bonnet	Bronze	IBR 282(a)(iv) Gr.B
Body Seat Ring & Valve Disc	Stainless Steel	AISI-410

Dimensions (in mm)

Nominal Size	Nominal Size (Inches)	F	H (Approx.)
15	1/2	83±1.5	60
20	3/4	95±1.5	60
25	1	111±1.5	73
32	1.1/4	133±1.5	80
40	1.1/2	152±1.5	90
50	2	178±1.5	108

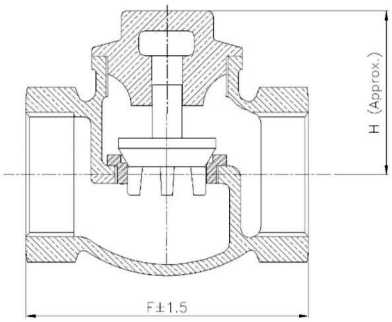

Notes
1. Product images are for illustration purposes only. Actual product may vary.
2. Actual dimensions may change over time, due to continual design improvements. Please confirm before placing order.

Sant Valves Pvt. Ltd.
G.T.Road Bye Pass,
Jalandhar – 144012. Punjab. INDIA
https://www.santvalves.com
Phone : +91 181 5084693
Fax: +91 181 5062270
Email : info@santvalves.com

SANT VALVES
SINCE 1953

I.B.R LISTED FM APPROVED
ISO 9001 CERTIFIED COMPANY

IBR-3B Bronze Horizontal Lift Check Valve Bolted Cover, Screwed Ends (IBR Approved)

Product Description

HSN 84813000

Product : 'SANT' Bronze Horizontal Lift Check Valve
Type of Pattern : Straight Type
Body Material cum Standard : Bronze IBR 282(a)(iv) Gr.B
Description : Bolted Cover
Type of Seat : Renewable Seat
Type of Disc : Renewable Disc
Trim : SS AISI-410
End Details : Screwed female BSP Taper threads to BS 21

Photo Not Available

Testing & Certification

Body Test Pressure : 500 Psig.Hyd.
Seat Test Pressure : 500 Psig. Hyd. & 250 Psig. Steam
Working Pressure : Max.BOP 250 Psig.(17.58Kg/cm²)
Maximum Working Temperature: 225°C (435°F)

Test Certificate in Form III-C as per IBR is furnished with every supply.

Application

Water	Oil	Steam

Materials of Construction

Components	Materials	Specifications
Body, Bonnet	Bronze	IBR 282(a)(iv) Gr.B
Body Seat Ring & Valve Disc	Stainless Steel	AISI-410
Gasket	CAF	IS:2712 Gr.C
Fasteners	Mild Steel	—

Dimensions (in mm)

Nominal Size	Nominal Size (Inches)	F	H (Approx.)
40	1.1/2	152±1.5	105
50	2	178±1.5	125
65	2.1/2	203±1.5	131
80	3	254±1.5	137

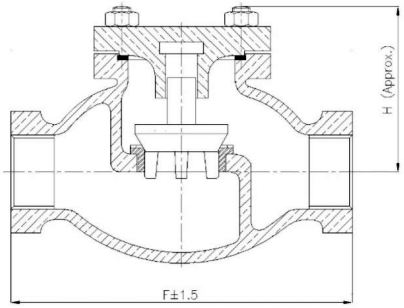

Notes
1. Product images are for illustration purposes only. Actual product may vary.
2. Actual dimensions may change over time, due to continual design improvements. Please confirm before placing order.

Sant Valves Pvt. Ltd.
G.T.Road Bye Pass,
Jalandhar – 144012. Punjab. INDIA
https://www.santvalves.com
Phone : +91 181 5084693
Fax: +91 181 5062270
Email : info@santvalves.com

SANT VALVES
SINCE 1953

I.B.R LISTED FM APPROVED

ISO 9001 CERTIFIED COMPANY

IBR-3C Bronze Horizontal Lift Check Valve Screwed Cover, Flanged Ends (IBR Approved)

Product Description

HSN 84813000

Product : 'SANT' Bronze Horizontal Lift Check Valve
Type of Pattern : Straight Type
Body Material cum Standard : Bronze IBR 282(a)(iv) Gr.B
Description : Screwed in cover
Type of Seat : Renewable Seat
Type of Disc : Renewable Disc
Trim : SS AISI-410
End Details : Flanges as per BS 10 Table H F.F. undrilled

Testing & Certification

Body Test Pressure : 500 Psig.Hyd.
Seat Test Pressure : 500 Psig. Hyd. & 250 Psig. Steam
Working Pressure : Max.BOP 250 Psig.(17.58Kg/cm²)
Maximum Working Temperature: 225°C (435°F)

Test Certificate in Form III-C as per IBR is furnished with every supply.

Application

Water	Oil	Steam

Materials of Construction

Components	Materials	Specifications
Body, Bonnet	Bronze	IBR 282(a)(iv) Gr.B
Body Seat Ring & Valve Disc	Stainless Steel	AISI-410

Dimensions (in mm)

Nominal Size	Nominal Size (Inches)	F	H (Approx.)
15	1/2	102±1.5	55
20	3/4	114±1.5	60
25	1	127±1.5	73
32	1.1/4	140±1.5	75
40	1.1/2	152±1.5	85
50	2	178±1.5	108

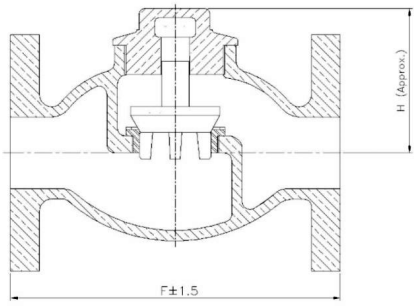

Notes
1. Product images are for illustration purposes only. Actual product may vary.
2. Actual dimensions may change over time, due to continual design improvements. Please confirm before placing order.

Sant Valves Pvt. Ltd.
G.T.Road Bye Pass,
Jalandhar – 144012. Punjab. INDIA

https://www.santvalves.com

Phone : +91 181 5084693
Fax: +91 181 5062270
Email : info@santvalves.com

SANT VALVES
SINCE 1953

ISO 9001 CERTIFIED COMPANY

IBR-3D Bronze Horizontal Lift Check Valve Bolted Cover, Flanged Ends (IBR Approved)

Product Description

HSN 84813000

Product : ‘SANT’ Bronze Horizontal Lift Check Valve
Type of Pattern : Straight Type
Body Material cum Standard : Bronze IBR 282(a)(iv) Gr.B
Description : Bolted cover
Type of Seat : Renewable Seat
Type of Disc : Renewable Disc
Trim : SS AISI-410
End Details : Flanges as per BS 10 Table H F.F. undrilled

Testing & Certification

Body Test Pressure : 500 Psig.Hyd.
Seat Test Pressure : 500 Psig. Hyd. & 250 Psig. Steam
Working Pressure : Max.BOP 250 Psig.(17.58Kg/cm²)
Maximum Working Temperature: 225°C (435°F)

Test Certificate in Form III-C as per IBR is furnished with every supply.

Application

Water	Oil	Steam

Materials of Construction

Components	Materials	Specifications
Body, Bonnet	Bronze	IBR 282(a)(iv) Gr.B
Body Seat Ring & Valve Disc	Stainless Steel	AISI-410
Gasket	CAF	IS:2712 Gr.C
Fasteners	Mild Steel	—

Dimensions (in mm)

Nominal Size	Nominal Size (Inches)	F	H (Approx.)
40	1.1/2	152±1.5	105
50	2	178±1.5	125
65	2.1/2	229±1.5	131
80	3	267±1.5	140
100	4	292±1.5	172

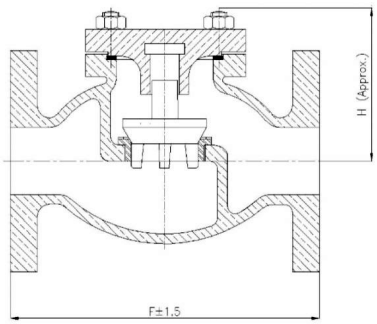

Notes
1. Product images are for illustration purposes only. Actual product may vary.
2. Actual dimensions may change over time, due to continual design improvements. Please confirm before placing order.

Sant Valves Pvt. Ltd.
G.T.Road Bye Pass,
Jalandhar – 144012. Punjab. INDIA
https://www.santvalves.com
Phone : +91 181 5084693
Fax: +91 181 5062270
Email : info@santvalves.com

SANT VALVES
SINCE 1953

ISO 9001 CERTIFIED COMPANY

IBR-3E Bronze Horizontal Lift Check Valve Bolted Cover, Flanged Ends (IBR Approved)

Product Description

HSN 84813000

Product : ‘SANT’ Bronze Horizontal Lift Check Valve
Type of Pattern : Straight Type
Body Material cum Standard : Bronze IBR 282(a)(iv) Gr.B
Description : Bolted cover
Type of Seat : Renewable Seat
Type of Disc : Renewable Disc
Trim : SS AISI-410
End Details : Flanges as per BS 10 Table F F.F. undrilled

Testing & Certification

Body Test Pressure : 300 Psig.Hyd.
Seat Test Pressure : 300 Psig. Hyd. & 150 Psig. Steam
Working Pressure : Max.BOP 150 Psig.(10.54Kg/cm²)
Maximum Working Temperature: 225°C (435°F)

Test Certificate in Form III-C as per IBR is furnished with every supply.

Application

Water	Oil	Steam

Materials of Construction

Components	Materials	Specifications
Body, Bonnet	Bronze	IBR 282(a)(iv) Gr.B
Body Seat Ring & Valve Disc	Stainless Steel	AISI-410
Gasket	CAF	IS:2712 Gr.C
Fasteners	Mild Steel	—

Dimensions (in mm)

Nominal Size	Nominal Size (Inches)	F	H (Approx.)
40	1.1/2	143±1.5	105
50	2	171±1.5	125
65	2.1/2	225±1.5	131
80	3	264±1.5	140
100	4	289±1.5	165

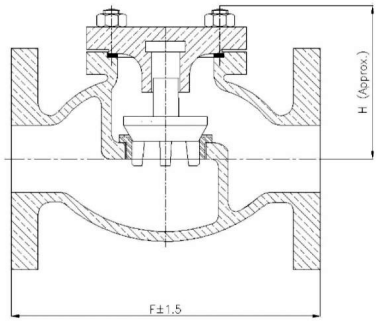

Notes
1. Product images are for illustration purposes only. Actual product may vary.
2. Actual dimensions may change over time, due to continual design improvements. Please confirm before placing order.

Sant Valves Pvt. Ltd.
G.T.Road Bye Pass,
Jalandhar – 144012. Punjab. INDIA
https://www.santvalves.com
Phone : +91 181 5084693
Fax: +91 181 5062270
Email : info@santvalves.com

SANT VALVES
SINCE 1953

I.B.R ISI UL LISTED FM APPROVED

ISO 9001 CERTIFIED COMPANY

IBR-3F Bronze Horizontal Lift Check Valve Screwed Cover, Flanged Ends (IBR Approved)

Product Description

HSN 84813000

Product : 'SANT' Bronze Horizontal Lift Check Valve
Type of Pattern : Straight Type
Body Material cum Standard : Bronze IBR 282(a)(iv) Gr.B
Description : Screwed in cover
Type of Seat : Renewable Seat
Type of Disc : Renewable Disc
Trim : SS AISI-410
End Details : Flanges as per BS 10 Table F F.F. undrilled

Testing & Certification

Body Test Pressure : 300 Psig.Hyd.
Seat Test Pressure : 300 Psig. Hyd. & 150 Psig. Steam
Working Pressure : Max.BOP 150 Psig.(10.54Kg/cm²)
Maximum Working Temperature: 225°C (435°F)

Test Certificate in Form III-C as per IBR is furnished with every supply.

Application

Water	Oil	Steam

Materials of Construction

Components	Materials	Specifications
Body, Bonnet	Bronze	IBR 282(a)(iv) Gr.B
Body Seat Ring & Valve Disc	Stainless Steel	AISI-410

Dimensions (in mm)

Nominal Size	Nominal Size (Inches)	F	H (Approx.)
15	1/2	95±1.5	55
20	3/4	108±1.5	60
25	1	118±1.5	73
32	1.1/4	127±1.5	80
40	1.1/2	143±1.5	90
50	2	171±1.5	100

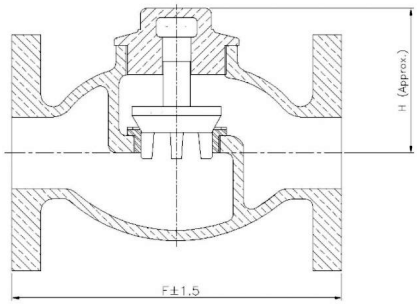

Notes
1. Product images are for illustration purposes only. Actual product may vary.
2. Actual dimensions may change over time, due to continual design improvements. Please confirm before placing order.

Sant Valves Pvt. Ltd.
G.T.Road Bye Pass,
Jalandhar – 144012. Punjab. INDIA
https://www.santvalves.com
Phone : +91 181 5084693
Fax: +91 181 5062270
Email : info@santvalves.com

SANT VALVES
SINCE 1953

ISO 9001 CERTIFIED COMPANY

IBR-4A Bronze Vertical Lift Check Valve Screwed Ends (IBR Approved)

Product Description

HSN 84813000

Product : ‘SANT’ Bronze Vertical Non Return Valve
Type of Pattern : Vertical Type
Body Material cum Standard : Bronze IBR 282(a)(iv) Gr.B
Description : Two piece design
Type of Seat : Renewable Seat
Type of Disc : Renewable Disc
Trim : SS AISI-410
End Details : Screwed female BSP Taper threads to BS 21

Testing & Certification

Body Test Pressure : 500 Psig.Hyd.
Seat Test Pressure : 500 Psig. Hyd. & 250 Psig. Steam
Working Pressure : Max.BOP 250 Psig.(17.58Kg/cm²)
Maximum Working Temperature: 225°C (435°F)

Test Certificate in Form III-C as per IBR is furnished with every supply.

Application

Water	Oil	Steam

Materials of Construction

Components	Materials	Specifications
Body	Bronze	IBR 282(a)(iv) Gr.B
Body Seat Ring & Valve Disc	Stainless Steel	AISI-410

Dimensions (in mm)

Nominal Size	Nominal Size (Inches)	F
15	1/2	73±1.5
20	3/4	76±1.5
25	1	90±1.5
32	1.1/4	114±1.5
40	1.1/2	127±1.5
50	2	146±1.5

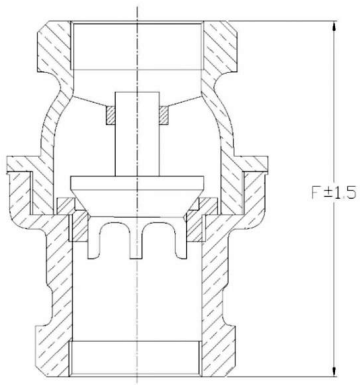

Notes
1. Product images are for illustration purposes only. Actual product may vary.
2. Actual dimensions may change over time, due to continual design improvements. Please confirm before placing order.

Sant Valves Pvt. Ltd.
G.T.Road Bye Pass,
Jalandhar – 144012. Punjab. INDIA
https://www.santvalves.com
Phone : +91 181 5084693
Fax: +91 181 5062270
Email : info@santvalves.com

SANT VALVES
SINCE 1953

ISO 9001 CERTIFIED COMPANY

IBR-4B Bronze Vertical Lift Check Valve Flanged Ends (IBR Approved)

Product Description

HSN 84813000

Product : ‘SANT’ Bronze Vertical Lift Check Valve
Type of Pattern : Vertical Type
Body Material cum Standard : Bronze IBR 282(a)(iv) Gr.B
Description : Two piece design
Type of Seat : Renewable Seat
Type of Disc : Renewable Disc
Trim : SS AISI-410
End Details : Flanges as per BS 10 Table H F.F. undrilled

Testing & Certification

Body Test Pressure : 500 Psig.Hyd.
Seat & Back Seat Test Pressure : 500 Psig. Hyd. & 250 Psig. Steam
Working Pressure : Max.BOP 250 Psig.(17.58Kg/cm²)
Maximum Working Temperature: 225°C (435°F)

Test Certificate in Form III-C as per IBR is furnished with every supply.

Application

Water	Oil	Steam

Materials of Construction

Components	Materials	Specifications
Body	Bronze	IBR 282(a)(iv) Gr.B
Body Seat Ring & Valve Disc	Stainless Steel	AISI-410

Dimensions (in mm)

Nominal Size	Nominal Size (Inches)	F
15	1/2	76±1.5
20	3/4	82.5±1.5
25	1	102±1.5
32	1.1/4	114±1.5
40	1.1/2	133±1.5
50	2	152±1.5

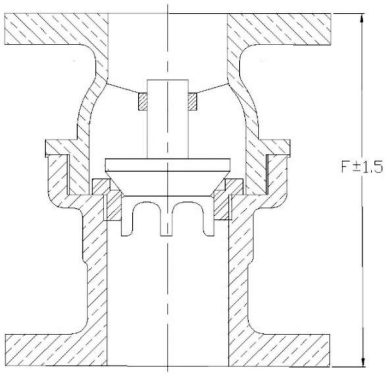

Notes
1. Product images are for illustration purposes only. Actual product may vary.
2. Actual dimensions may change over time, due to continual design improvements. Please confirm before placing order.

Sant Valves Pvt. Ltd.
G.T.Road Bye Pass,
Jalandhar – 144012. Punjab. INDIA
https://www.santvalves.com
Phone : +91 181 5084693
Fax: +91 181 5062270
Email : info@santvalves.com

SANT VALVES
SINCE 1953

ISO 9001 CERTIFIED COMPANY

IBR-5 Bronze Pop-Type Safety Valve Screwed, Open Discharge (IBR Approved)

Product Description

HSN 84814000

Product : ‘SANT’ Bronze Safety Valve
Body Material cum Standard : Bronze IBR 282(a)(iv) Gr.B
Description : Pop-Type open discharge
Type of Seat : Integral
Type of Disc : Renewable Disc
Trim : Cu-Alloy
End Details : Inlet screwed male BSP Taper threads to BS 21

Testing & Certification

Body Test Pressure : 500 Psig.Hyd.
Working Pressure : Max.BOP 250 Psig.(17.58Kg/cm²)
Maximum Working Temperature: 225°C (435°F)
Note : Please advice set pressure while placing order

Test Certificate in Form III-C as per IBR is furnished with every supply.

Application

Gas	Steam

Materials of Construction

Components	Materials	Specifications
Body, Spring Chamber, Valve Disc, Blow-down Ring, Spring Discs & Adjusting Screw	Bronze	IBR 282(a)(iv) Gr.B
Spindle, Check Nuts & Screws	Forged Brass	IS:6912 FLB
Spring	Spring Steel	IBR 307 to 314
Cap	Aluminium Casting	—
Easing Lever	Mild Steel	—

Dimensions (in mm)

Nominal Size	Nominal Size (Inches)	ØA (Inches)	B (Inches)	H (Approx.)
15	1/2	1/2	3/4	290
20	3/4	3/4	1	325
25	1	1	1.1/4	325
40	1.1/2	1.1/2	2	420
50	2	2	2.1/2	460
			BSP (T)	

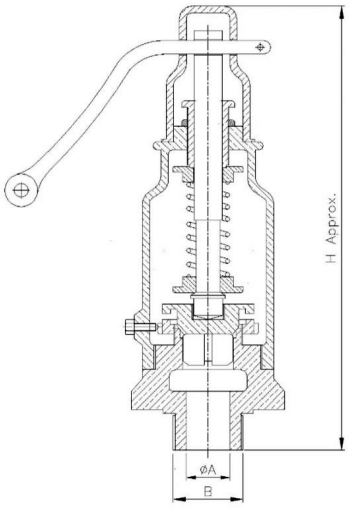

Notes
1. Product images are for illustration purposes only. Actual product may vary.
2. Actual dimensions may change over time, due to continual design improvements. Please confirm before placing order.

Sant Valves Pvt. Ltd.
G.T.Road Bye Pass,
Jalandhar – 144012. Punjab. INDIA
https://www.santvalves.com
Phone : +91 181 5084693
Fax: +91 181 5062270
Email : info@santvalves.com

SANT VALVES
SINCE 1953

ISO 9001 CERTIFIED COMPANY

IBR-6 Bronze Pop-Type Safety Valve Screwed, Enclosed Discharge (IBR Approved)

Product Description

HSN 84814000

Product : 'SANT' Bronze Safety Valve
Type of Pattern : Right Angle Pattern
Body Material cum Standard : Bronze IBR 282(a)(iv) Gr.B
Description : Pop-Type enclosed discharge
Type of Seat : Integral
Type of Disc : Renewable Disc
Trim : Cu-Alloy
End Details : Inlet screwed male BSP Taper threads to BS 21 Outlet screwed female BSP Parallel threads to BS 21.

Photo Not Available

Testing & Certification

Body Test Pressure : 500 Psig.Hyd.
Working Pressure : Max.BOP 250 Psig.(17.58Kg/cm²)
Maximum Working Temperature: 225°C (435°F)
Note : Please advice set pressure while placing order

Test Certificate in Form III-C as per IBR is furnished with every supply.

Application

Gas	Steam

Materials of Construction

Components	Materials	Specifications
Body, Spring Chamber, Valve Disc, Blow-down Ring, Spring Discs & Adjusting Screw	Bronze	IBR 282(a)(iv) Gr.B
Spindle, Check Nuts & Screws	Forged Brass	IS:6912 FLB
Spring	Spring Steel	IBR 307 to 314
Cap	Aluminium Casting	—
Easing Lever	Mild Steel	—

Dimensions (in mm)

Nominal Size	Nominal Size (Inches)	ØA (Inches)	B (Inches)	ØC (Inches)	H (Approx.)	J (Approx.)	F±1.5
15	1/2	1/2	3/4	1/2	290	73	54
20	3/4	3/4	1	3/4	325	79	64
25	1	1	1.1/4	1	325	79	64
40	1.1/2	1.1/2	2	1.1/2	420	103	68
50	2	2	2.1/2	2	460	113	92
			BSP (T)	BSP			

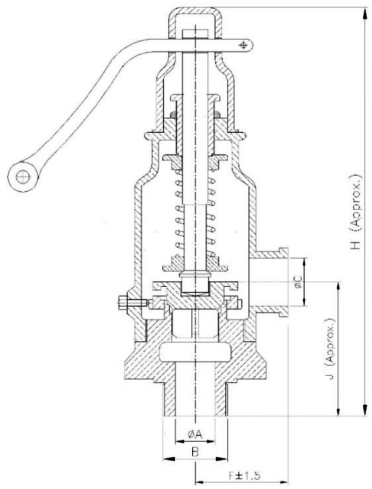

Notes
1. Product images are for illustration purposes only. Actual product may vary.
2. Actual dimensions may change over time, due to continual design improvements. Please confirm before placing order.

Sant Valves Pvt. Ltd.
G.T.Road Bye Pass,
Jalandhar – 144012. Punjab. INDIA
https://www.santvalves.com
Phone : +91 181 5084693
Fax: +91 181 5062270
Email : info@santvalves.com

SANT VALVES
SINCE 1953

I.B.R | ISI | UL LISTED | FM APPROVED

ISO 9001 CERTIFIED COMPANY

IBR-7 Bronze Combined Feed Check Valve Flanged (IBR Approved)

Product Description

HSN 84813000

Product : 'SANT' Bronze Combined Feed Check Valve
Type of Pattern : Right Angle Pattern
Body Material cum Standard : Bronze IBR 282(a)(iv) Gr.B
Description : Bolted Gland Flange & Screwed in cover
Type of Seat : Integral
Type of Disc : Renewable Disc
Trim : Cu-Alloy
Gland Packing : Expanded Pure Flexible Graphite
End Details : Flanges as per BS 10 Table H F.F. undrilled

Testing & Certification

Body Test Pressure : 500 Psig.Hyd.
Seat Test Pressure : 500 Psig. Hyd. & 250 Psig. Steam
Working Pressure : Max.BOP 250 Psig.(17.58Kg/cm²)
Maximum Working Temperature: 225°C (435°F)

Test Certificate in Form III-C as per IBR is furnished with every supply.

Application

Water	Steam

Materials of Construction

Components	Materials	Specifications
Body, Bonnet, Valve Disc, Plug & Gland	Bronze	IBR 282(a)(iv) Gr.B
Gland Packing	Expanded Pure Flexible Graphite	—
Spring	Phosphorus Bronze	IS:7608
Fasteners	Mild Steel	—

Dimensions (in mm)

Nominal Size	Nominal Size (Inches)	A (Approx.)	B (Approx.)
15	1/2	108	51
20	3/4	113	51
25	1	137	60
32	1.1/4	159	70
40	1.1/2	165	80
50	2	203	86

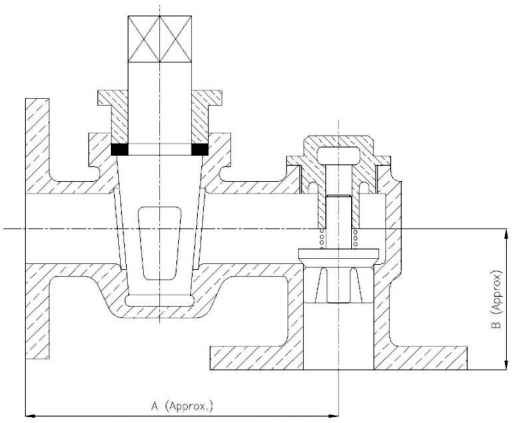

Notes
1. Product images are for illustration purposes only. Actual product may vary.
2. Actual dimensions may change over time, due to continual design improvements. Please confirm before placing order.

Sant Valves Pvt. Ltd.
G.T.Road Bye Pass,
Jalandhar – 144012. Punjab. INDIA

https://www.santvalves.com

Phone : +91 181 5084693
Fax: +91 181 5062270
Email : info@santvalves.com

SANT VALVES
SINCE 1953

ISO 9001 CERTIFIED COMPANY

IBR-8 Bronze Pressure Gauge Valve (IBR Approved)

Product Description

HSN 84812000

Product : ‘SANT’ Bronze Pressure Gauge Valve
Body Material cum Standard : Bronze IBR 282(a)(iv) Gr.B
Type of Seat : Plug type
End Details : Screwed female BSP Parallel threads to BS 21.

Testing & Certification

Hydraulic Test Pressure : 500 Psig.Hyd.
Working Pressure : Max.BOP 250 Psig.(17.58Kg/cm²)
Maximum Working Temperature: 225°C (435°F)

Test Certificate in Form lll-C as per IBR is furnished with every supply.

Application

Water	Steam

Materials of Construction

Components	Materials	Specifications
Body, Plug, Coupling Nut, Tail Pipe & Washer	Bronze	IBR 282(a)(iv) Gr.B
Nut	Forged Brass	IS:6912 FLB

Dimensions (in mm)

Nominal Size	Nominal Size (Inches)	F
10	3/8	140±1.5
15	1/2	140±1.5

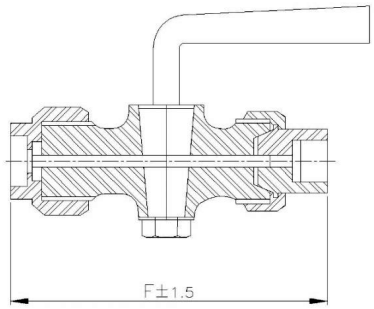

Notes
1. Product images are for illustration purposes only. Actual product may vary.
2. Actual dimensions may change over time, due to continual design improvements. Please confirm before placing order.

Sant Valves Pvt. Ltd.
G.T.Road Bye Pass,
Jalandhar – 144012. Punjab. INDIA
https://www.santvalves.com
Phone : +91 181 5084693
Fax: +91 181 5062270
Email : info@santvalves.com

SANT VALVES
SINCE 1953

ISO 9001 CERTIFIED COMPANY

IBR-9AR Bronze Controllable Feed Check Valve Right Angle, Screwed (IBR Approved)

Product Description

HSN 84813000

Product : ‘SANT’ Bronze Controllable Feed Check Valve
Type of Pattern : Right Angle
Body Material cum Standard : Bronze IBR 282(a)(iv) Gr.B
Description : Screwed in Bonnet, OS Yoke Type , Rising Stem (15mm to 32mm)
Bolted Bonnet, OS Yoke Type, Rising Stem (40mm to 50mm)
Type of Seat : Renewable Seat
Type of Disc : Renewable Disc
Trim : SS AISI-410
Gland Packing : Expanded Pure Flexible Graphite
End Details : Screwed female BSP Taper threads to BS 21

Photo Not Available

Testing & Certification

Body Test Pressure : 500 Psig.Hyd.
Seat Test Pressure : 500 Psig. Hyd. & 250 Psig. Steam
Working Pressure : Max.BOP 250 Psig.(17.58Kg/cm²)
Maximum Working Temperature: 225°C (435°F)

Test Certificate in Form III-C as per IBR is furnished with every supply.

Application

Water	Steam

Materials of Construction

Components	Materials	Specifications
Body, Bonnet, Check Nut & Gland	Bronze	IBR 282(a)(iv) Gr.B
Body Seat Ring, Valve Disc & Stem	Stainless Steel	AISI-410
Handwheel	Cast Iron	IBR 86 to 93 Gr.A
Gland Packing	Expanded Pure Flexible Graphite	—
Fasteners, Washer & Nut for Handwheel	Mild Steel	—

Dimensions (in mm)

Nominal Size	Nominal Size (Inches)	F	H (Approx.)	ØW (Approx.)
15	1/2	41±1.5	123	70
20	3/4	48±1.5	127	70
25	1	57±1.5	146	90
32	1.1/4	67±1.5	170	100
40	1.1/2	76±1.5	178	127
50	2	89±1.5	200	144

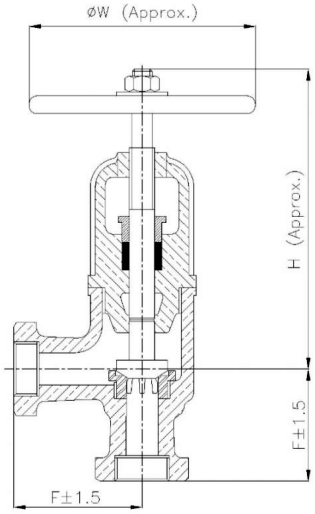

Notes
1. Product images are for illustration purposes only. Actual product may vary.
2. Actual dimensions may change over time, due to continual design improvements. Please confirm before placing order.

Sant Valves Pvt. Ltd.
G.T.Road Bye Pass,
Jalandhar – 144012. Punjab. INDIA
https://www.santvalves.com
Phone : +91 181 5084693
Fax: +91 181 5062270
Email : info@santvalves.com

SANT VALVES
SINCE 1953

ISO 9001 CERTIFIED COMPANY

IBR-9AS Bronze Controllable Feed Check Valve Straight, Screwed (IBR Approved)

Product Description

HSN 84813000

Product : ‘SANT’ Bronze Controllable Feed Check Valve
Type of Pattern : Straight Type
Body Material cum Standard : Bronze IBR 282(a)(iv) Gr.B
Description : Screwed in Bonnet, OS Yoke Type , Rising Stem (15mm to 32mm)
Bolted Bonnet, OS Yoke Type, Rising Stem (40mm to 50mm)
Type of Seat : Renewable Seat
Type of Disc : Renewable Disc
Trim : SS AISI-410
Gland Packing : Expanded Pure Flexible Graphite
End Details : Screwed female BSP Taper threads to BS 21

Photo Not Available

Testing & Certification

Body Test Pressure : 500 Psig.Hyd.
Seat Test Pressure : 500 Psig. Hyd. & 250 Psig. Steam
Working Pressure : Max.BOP 250 Psig.(17.58Kg/cm²)
Maximum Working Temperature: 225°C (435°F)

Test Certificate in Form III-C as per IBR is furnished with every supply.

Application

Water	Steam

Materials of Construction

Components	Materials	Specifications
Body, Bonnet, Check Nut & Gland	Bronze	IBR 282(a)(iv) Gr.B
Body Seat Ring, Valve Disc & Stem	Stainless Steel	AISI-410
Handwheel	Cast Iron	IBR 86 to 93 Gr.A
Gland Packing	Expanded Pure Flexible Graphite	—
Fasteners, Washer & Nut for Handwheel	Mild Steel	—

Dimensions (in mm)

Nominal Size	Nominal Size (Inches)	F	H (Approx.)	ØW (Approx.)
10	3/8	75±1.5	135	70
15	1/2	83±1.5	135	70
20	3/4	95±1.5	150	70
25	1	111±1.5	165	90
32	1.1/4	133±1.5	200	100
40	1.1/2	152±1.5	220	127
50	2	178±1.5	250	144

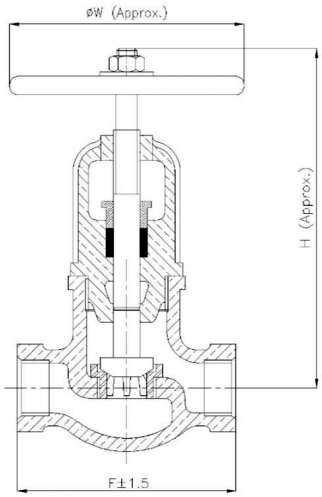

Notes
1. Product images are for illustration purposes only. Actual product may vary.
2. Actual dimensions may change over time, due to continual design improvements. Please confirm before placing order.

Sant Valves Pvt. Ltd.
G.T.Road Bye Pass,
Jalandhar – 144012. Punjab. INDIA
https://www.santvalves.com
Phone : +91 181 5084693
Fax: +91 181 5062270
Email : info@santvalves.com

SANT VALVES
SINCE 1953

I.B.R | ISI | UL LISTED | FM APPROVED

ISO 9001 CERTIFIED COMPANY

IBR-9BR Bronze Controllable Feed Check Valve Right Angle, Flanged (IBR Approved)

Product Description

HSN 84813000

Product : 'SANT' Bronze Controllable Feed Check Valve
Type of Pattern : Right Angle
Body Material cum Standard : Bronze IBR 282(a)(iv) Gr.B
Description : Screwed in Bonnet, OS Yoke Type , Rising Stem (15mm to 32mm)
Bolted Bonnet, OS Yoke Type, Rising Stem (40mm to 50mm)
Type of Seat : Renewable Seat
Type of Disc : Renewable Disc
Trim : SS AISI-410
Gland Packing : Expanded Pure Flexible Graphite
End Details : Flanges as per BS 10 Table H F.F. undrilled

Testing & Certification

Body Test Pressure : 500 Psig.Hyd.
Seat Test Pressure : 500 Psig. Hyd. & 250 Psig. Steam
Working Pressure : Max.BOP 250 Psig.(17.58Kg/cm²)
Maximum Working Temperature: 225°C (435°F)

Test Certificate in Form III-C as per IBR is furnished with every supply.

Application

Water	Steam

Materials of Construction

Components	Materials	Specifications
Body, Bonnet, Check Nut & Gland	Bronze	IBR 282(a)(iv) Gr.B
Body Seat Ring, Valve Disc & Stem	Stainless Steel	AISI-410
Handwheel	Cast Iron	IBR 86 to 93 Gr.A
Gland Packing	Expanded Pure Flexible Graphite	—
Fasteners, Washer & Nut for Handwheel	Mild Steel	—

Dimensions (in mm)

Nominal Size	Nominal Size (Inches)	F	H (Approx.)	ØW (Approx.)
15	1/2	73±1.5	127	70
20	3/4	76±1.5	133	70
25	1	83±1.5	140	90
32	1.1/4	89±1.5	172	100
40	1.1/2	95±1.5	178	127
50	2	108±1.5	200	144

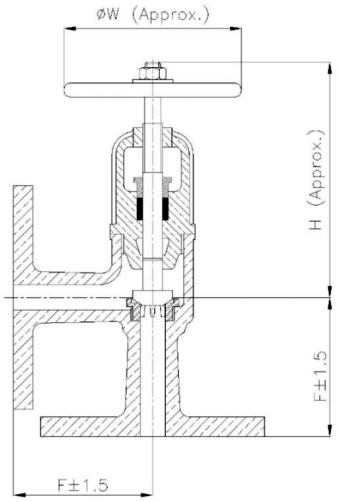

Notes
1. Product images are for illustration purposes only. Actual product may vary.
2. Actual dimensions may change over time, due to continual design improvements. Please confirm before placing order.

Sant Valves Pvt. Ltd.
G.T.Road Bye Pass,
Jalandhar – 144012. Punjab. INDIA
https://www.santvalves.com
Phone : +91 181 5084693
Fax: +91 181 5062270
Email : info@santvalves.com

SANT VALVES
SINCE 1953

I.B.R LISTED FM APPROVED

ISO 9001 CERTIFIED COMPANY

IBR-9BS Bronze Controllable Feed Check Valve Straight, Flanged (IBR Approved)

Product Description

HSN 84813000

Product : 'SANT' Bronze Controllable Feed Check Valve
Type of Pattern : Straight Type
Body Material cum Standard : Bronze IBR 282(a)(iv) Gr.B
Description : Screwed in Bonnet, OS Yoke Type , Rising Stem (15mm to 32mm)
Bolted Bonnet, OS Yoke Type, Rising Stem (40mm to 50mm)
Type of Seat : Renewable Seat
Type of Disc : Renewable Disc
Trim : SS AISI-410
Gland Packing : Expanded Pure Flexible Graphite
End Details : Flanges as per BS 10 Table H F.F. undrilled

Photo Not Available

Testing & Certification

Body Test Pressure : 500 Psig.Hyd.
Seat Test Pressure : 500 Psig. Hyd. & 250 Psig. Steam
Working Pressure : Max.BOP 250 Psig.(17.58Kg/cm²)
Maximum Working Temperature: 225°C (435°F)

Test Certificate in Form III-C as per IBR is furnished with every supply.

Application

Water	Steam

Materials of Construction

Components	Materials	Specifications
Body, Bonnet, Check Nut & Gland	Bronze	IBR 282(a)(iv) Gr.B
Body Seat Ring, Valve Disc & Stem	Stainless Steel	AISI-410
Handwheel	Cast Iron	IBR 86 to 93 Gr.A
Gland Packing	Expanded Pure Flexible Graphite	—
Fasteners, Washer & Nut for Handwheel	Mild Steel	—

Dimensions (in mm)

Nominal Size	Nominal Size (Inches)	F	H (Approx.)	ØW (Approx.)
15	1/2	102±1.5	135	70
20	3/4	114±1.5	150	70
25	1	127±1.5	165	90
32	1.1/4	140±1.5	200	100
40	1.1/2	152±1.5	220	127
50	2	178±1.5	250	144

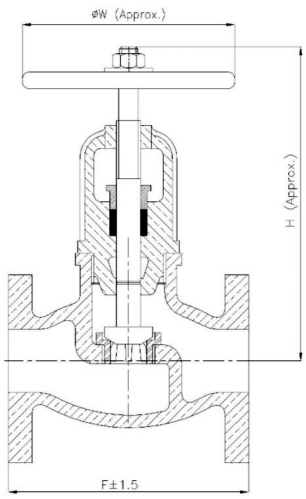

Notes
1. Product images are for illustration purposes only. Actual product may vary.
2. Actual dimensions may change over time, due to continual design improvements. Please confirm before placing order.

Sant Valves Pvt. Ltd.
G.T.Road Bye Pass,
Jalandhar – 144012. Punjab. INDIA
https://www.santvalves.com
Phone : +91 181 5084693
Fax: +91 181 5062270
Email : info@santvalves.com

SANT VALVES
SINCE 1953

ISO 9001 CERTIFIED COMPANY

IBR-10A Bronze Asbestos Packed Water Level Gauge Screwed (IBR Approved)

Product Description

HSN 90261020

Product : ‘SANT’ Bronze Asbestos Packed Water Level Gauge
Type of Pattern : Standard Pattern
Body Material cum Standard : Bronze IBR 282(a)(iv) Gr.B
Description : Right Hand Type / Left Hand Type
Gland Packing : Lubricated Asbestos
End Details : Screwed male BSP Parallel threads to BS 21.

Testing & Certification

Hydraulic Test Pressure : 300 Psig.Hyd.
Working Pressure : Max.BOP 150 Psig.(10.54Kg/cm²)
Maximum Working Temperature: 225°C (435°F)

Test Certificate in Form III-C as per IBR is furnished with every supply.

Application

Water	Steam

Materials of Construction

Components	Materials	Specifications
Body, Plug, Cover Nuts, Drain Cock & Back Nuts	Bronze	IBR 282(a)(iv) Gr.B
Fastening Nut	Forged Brass	IS:6912 FLB
Packing	Lubricated Asbestos	—

Dimensions (in mm)

Nominal Size	Nominal Size (Inches)	A
10	3/8	102
15	1/2	102
16	5/8	125
20	3/4	125

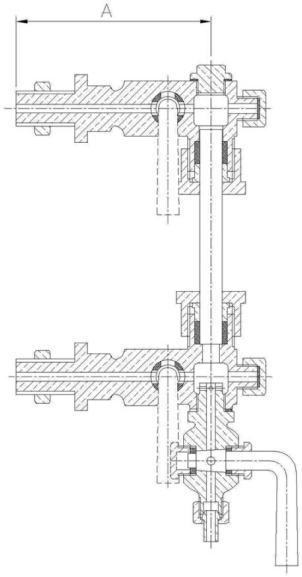

Notes
1. Product images are for illustration purposes only. Actual product may vary.
2. Actual dimensions may change over time, due to continual design improvements. Please confirm before placing order.

Sant Valves Pvt. Ltd.
G.T.Road Bye Pass,
Jalandhar – 144012. Punjab. INDIA

https://www.santvalves.com

Phone : +91 181 5084693
Fax: +91 181 5062270
Email : info@santvalves.com

SANT VALVES
SINCE 1953

ISO 9001 CERTIFIED COMPANY

IBR-10B Bronze Asbestos Packed Water Level Gauge Flanged (IBR Approved)

Product Description

HSN 90261020

Product : ‘SANT’ Bronze Asbestos Packed Water Level Gauge
Type of Pattern : Standard Pattern
Body Material cum Standard : Bronze IBR 282(a)(iv) Gr.B
Description : Right Hand Type / Left Hand Type
Gland Packing : Lubricated Asbestos
End Details : Flanges as per BS 10 Table F F.F. undrilled

Testing & Certification

Hydraulic Test Pressure : 300 Psig.Hyd.
Working Pressure : Max.BOP 150 Psig.(10.54Kg/cm²)
Maximum Working Temperature: 225°C (435°F)

Test Certificate in Form III-C as per IBR is furnished with every supply.

Application

Water	Steam

Materials of Construction

Components	Materials	Specifications
Body, Plug, Cover Nuts, Drain Cock & Back Nuts	Bronze	IBR 282(a)(iv) Gr.B
Packing	Lubricated Asbestos	—

Dimensions (in mm)

Nominal Size	Size (Inches)	A	ØB
10	3/8	80	12.7
15	1/2	80	19
16	5/8	99	25
20	3/4	99	25

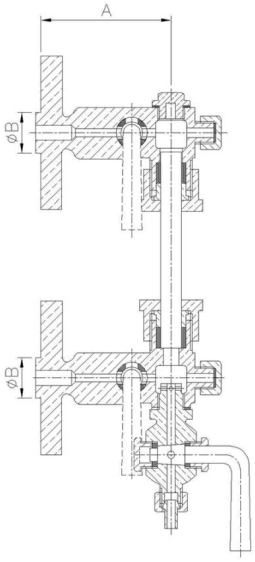

Notes
1. Product images are for illustration purposes only. Actual product may vary.
2. Actual dimensions may change over time, due to continual design improvements. Please confirm before placing order.

Sant Valves Pvt. Ltd.
G.T.Road Bye Pass,
Jalandhar – 144012. Punjab. INDIA
https://www.santvalves.com
Phone : +91 181 5084693
Fax: +91 181 5062270
Email : info@santvalves.com

SANT VALVES
SINCE 1953

ISO 9001 CERTIFIED COMPANY

IBR-11A Bronze Sleeve Packed Water Level Gauge Flanged (IBR Approved)

Product Description

HSN 90261020

Product : ‘SANT’ Bronze Sleeve Packed Water Level Gauge
Type of Pattern : Standard Pattern
Body Material cum Standard : Bronze IBR 282(a)(iv) Gr.B
Description : With automatic shut off device in water
Arm : Right Hand Type / Left Hand Type
End Details : Flanges as per BS 10 Table H F.F. undrilled

Testing & Certification

Hydraulic Test Pressure : 500 Psig.Hyd.
Working Pressure : Max.BOP 250 Psig.(17.58Kg/cm²)
Maximum Working Temperature : 435°F (225°C)

Test Certificate in Form III-C as per IBR is furnished with every supply.

Application

Water	Steam

Materials of Construction

Components	Materials	Specifications
Body, Cover, Drain Cock & Back Nuts	Bronze	IBR 282(a)(iv) Gr.B
Sleeve	Moulded Asbestos	—
Spindle	Stainless Steel	AISI410
Name Plate	Brass Sheet	IS:410
Fasteners	Mild Steel	—

Dimensions (in mm)

Nominal Size	Size (Inches)	A	B
15	1/2	92	19
—	5/8	92	25
20	3/4	92	25

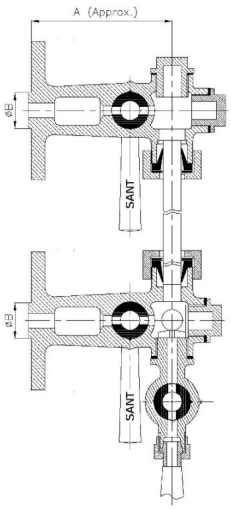

Notes
1. Product images are for illustration purposes only. Actual product may vary.
2. Actual dimensions may change over time, due to continual design improvements. Please confirm before placing order.

Sant Valves Pvt. Ltd.
G.T.Road Bye Pass,
Jalandhar – 144012. Punjab. INDIA
https://www.santvalves.com
Phone : +91 181 5084693
Fax: +91 181 5062270
Email : info@santvalves.com

SANT VALVES
SINCE 1953

ISO 9001 CERTIFIED COMPANY

IBR-11B Bronze Sleeve Packed Water Level Gauge Screwed (IBR Approved)

Product Description

HSN 90261020

Product : ‘SANT’ Bronze Sleeve Packed Water Level Gauge
Type of Pattern : Standard Pattern
Body Material cum Standard : Bronze IBR 282(a)(iv) Gr.B
Description : With automatic shut off device in water
Arm : Right Hand Type / Left Hand Type
End Details : Screwed male BSP Parallel threads to BS 21.

Testing & Certification

Hydraulic Test Pressure : 500 Psig.Hyd.
Working Pressure : Max.BOP 250 Psig.(17.58Kg/cm²)
Maximum Working Temperature : 435°F (225°C)

Test Certificate in Form III-C as per IBR is furnished with every supply.

Application

Water	Steam

Materials of Construction

Components	Materials	Specifications
Body, Cover, Drain Cock & Back Nuts	Bronze	IBR 282(a)(iv) Gr.B
Sleeve	Moulded Asbestos	—
Spindle	Stainless Steel	AISI410
Name Plate	Brass Sheet	IS:410
Fasteners	Mild Steel	—

Dimensions (in mm)

Nominal Size (mm)	Nominal Size (Inches)	A
10	3/8	80
16	5/8	92
20	3/4	92

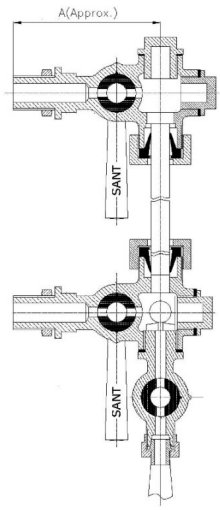

Notes
1. Product images are for illustration purposes only. Actual product may vary.
2. Actual dimensions may change over time, due to continual design improvements. Please confirm before placing order.

Sant Valves Pvt. Ltd.
G.T.Road Bye Pass,
Jalandhar – 144012. Punjab. INDIA
https://www.santvalves.com
Phone : +91 181 5084693
Fax: +91 181 5062270
Email : info@santvalves.com

SANT VALVES
SINCE 1953

ISO 9001 CERTIFIED COMPANY

IBR-12A Bronze Y-Type Strainer Screwed (IBR Approved)

Product Description

HSN 84818030

Product : ‘SANT’ Bronze Y-Type Strainer
Type of Pattern : Y Type
Body Material cum Standard : Bronze IBR 282(a)(iv) Gr.B
Description : Y-Type Screwed in cover, SS 304 Screen having 0.5mm Dia perforations
End Details : Screwed female BSP Taper threads to BS 21.

Testing & Certification

Hydraulic Test Pressure : 500 Psig.Hyd.
Working Pressure : Max.BOP 250 Psig.(17.58Kg/cm²)
Maximum Working Temperature : 435°F (225°C)

Test Certificate in Form III-C as per IBR is furnished with every supply.

Application

Water	Oil	Gas	Steam

Materials of Construction

Components	Materials	Specifications
Body, Bonnet	Bronze	IBR 282(a)(iv) Gr.B
Gasket	Compressed Asbestos Fiber	IS:2712 Gr.C
Strainer	Stainless Steel	AISI304

Dimensions (in mm)

Nominal Size	Nominal Size (Inches)	F
15	1/2	76
20	3/4	98
25	1	133
32	1.1/4	152
40	1.1/2	178
50	2	222

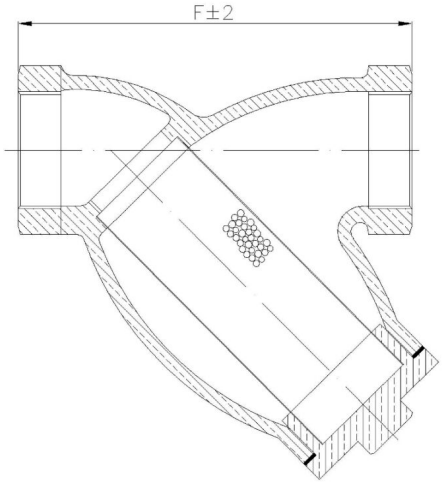

Notes
1. Product images are for illustration purposes only. Actual product may vary.
2. Actual dimensions may change over time, due to continual design improvements. Please confirm before placing order.

Sant Valves Pvt. Ltd.
G.T.Road Bye Pass,
Jalandhar – 144012. Punjab. INDIA

https://www.santvalves.com

Phone : +91 181 5084693
Fax: +91 181 5062270
Email : info@santvalves.com

SANT VALVES
SINCE 1953

ISO 9001 CERTIFIED COMPANY

IBR-12B Bronze Y-Type Strainer Flanged (IBR Approved)

Product Description

HSN 84818030

Product : ‘SANT’ Bronze Y-Type Strainer
Type of Pattern : Y Type
Body Material cum Standard : Bronze IBR 282(a)(iv) Gr.B
Description : Y-Type Screwed in cover, SS 304 Screen having 0.5mm Dia perforations
End Details : Flanges as per BS 10 Table H F.F. undrilled

Testing & Certification

Hydraulic Test Pressure : 500 Psig.Hyd.
Working Pressure : Max.BOP 250 Psig.(17.58Kg/cm²)
Maximum Working Temperature : 435°F (225°C)

Test Certificate in Form III-C as per IBR is furnished with every supply.

Application

Water	Oil	Gas	Steam

Materials of Construction

Components	Materials	Specifications
Body, Bonnet	Bronze	IBR 282(a)(iv) Gr.B
Gasket	Compressed Asbestos Fiber	IS:2712 Gr.C
Strainer	Stainless Steel	AISI304

Dimensions (in mm)

Nominal Size	Nominal Size (Inches)	F
15	1/2	114
20	3/4	140
25	1	162
32	1.1/4	178
40	1.1/2	203
50	2	203

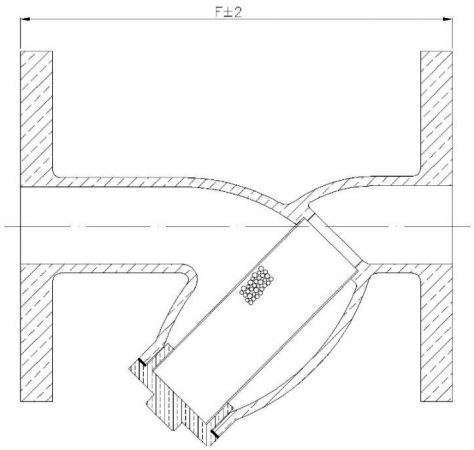

Notes
1. Product images are for illustration purposes only. Actual product may vary.
2. Actual dimensions may change over time, due to continual design improvements. Please confirm before placing order.

Sant Valves Pvt. Ltd.
G.T.Road Bye Pass,
Jalandhar – 144012. Punjab. INDIA

https://www.santvalves.com

Phone : +91 181 5084693
Fax: +91 181 5062270
Email : info@santvalves.com

SANT VALVES
SINCE 1953

ISO 9001 CERTIFIED COMPANY

IBR-13 Bronze Fusible Plug Screwed (IBR Approved)

Product Description

HSN 84814000

Product : ‘SANT’ Bronze Fusible Plug
Type of Pattern : Two piece design
Body Material cum Standard : Bronze IBR 282(a)(iv) Gr.B
End Details : Screwed male BSP Parallel threads to BS 21.

Note : Melting temperature of Fusible Alloy 270°C

Testing & Certification

Hydraulic Test Pressure : 500 Psig.Hyd.
Working Pressure : Max.BOP 250 Psig.(17.58Kg/cm²)
Maximum Working Temperature : 435°F (225°C)

Test Certificate in Form III-C as per IBR is furnished with every supply.

Application

Water	Steam

Materials of Construction

Components	Materials	Specifications
Body, Cone	Bronze	IBR 282(a)(iv) Gr.B
Fusible Alloy	Lead-Tin Alloy	—

Dimensions (in mm)

Nominal Size	Nominal Size (Inches)	F
15	1/2	52
20	3/4	62
25	1	75
32	1.1/4	86
40	1.1/2	90
50	2	97

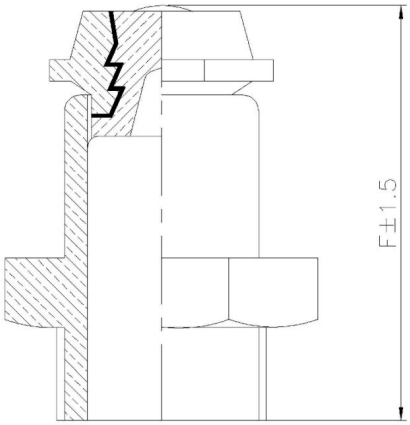

Notes
1. Product images are for illustration purposes only. Actual product may vary.
2. Actual dimensions may change over time, due to continual design improvements. Please confirm before placing order.

Sant Valves Pvt. Ltd.
G.T.Road Bye Pass,
Jalandhar – 144012. Punjab. INDIA

https://www.santvalves.com

Phone : +91 181 5084693
Fax: +91 181 5062270
Email : info@santvalves.com

SANT VALVES
SINCE 1953

ISO 9001 CERTIFIED COMPANY

IBR-14 Bronze Fusible Plug Screwed (IBR Approved)

Product Description

HSN 84814000

Product : 'SANT' Bronze Fusible Plug
Type of Pattern : One piece design
Body Material cum Standard : Bronze IBR 282(a)(iv) Gr.B
End Details : Screwed male BSP Parallel threads to BS 21.

Note : Melting temperature of Fusible Alloy 270°C

Testing & Certification

Hydraulic Test Pressure : 500 Psig.Hyd.
Working Pressure : Max.BOP 250 Psig.(17.58Kg/cm²)
Maximum Working Temperature : 435°F (225°C)

Test Certificate in Form III-C as per IBR is furnished with every supply.

Application

Water	Steam

Materials of Construction

Components	Materials	Specifications
Body, Cone	Bronze	IBR 282(a)(iv) Gr.B
Fusible Alloy	Lead-Tin Alloy	—

Dimensions (in mm)

Nominal Size	Nominal Size (Inches)	F
15	1/2	32
20	3/4	38
25	1	44

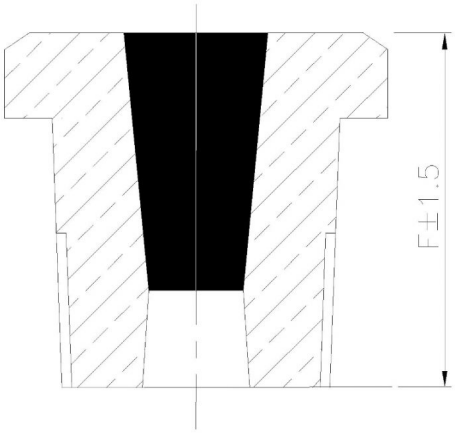

Notes
1. Product images are for illustration purposes only. Actual product may vary.
2. Actual dimensions may change over time, due to continual design improvements. Please confirm before placing order.

Sant Valves Pvt. Ltd.
G.T.Road Bye Pass,
Jalandhar – 144012. Punjab. INDIA

https://www.santvalves.com

Phone : +91 181 5084693
Fax: +91 181 5062270
Email : info@santvalves.com

SANT VALVES
SINCE 1953

ISO 9001 CERTIFIED COMPANY

IBR-15 Bronze Sight Glass Screwed (IBR Approved)

Product Description

HSN 84818030

Product : ‘SANT’ Bronze Sight Glass
Body Material cum Standard : Bronze IBR 282(a)(iv) Gr.B
Description : With toughened glass single window upto & including 25mm size & double window for size above 25mm
End Details : Screwed male BSP Taper threads to BS 21.

Testing & Certification

Hydraulic Test Pressure : 500 Psig.Hyd.
Working Pressure : Max.BOP 250 Psig.(17.58Kg/cm²)
Maximum Working Temperature : 435°F (225°C)

Test Certificate in Form III-C as per IBR is furnished with every supply.

Application

Water	Oil	Steam

Materials of Construction

Components	Materials	Specifications
Body & Ring	Bronze	IBR 282(a)(iv) Gr.B
Glass	Toughened Glass	—
Gasket	Compressed Asbestos Fibre	—

Dimensions (in mm)

Nominal Size	Nominal Size (Inches)	F	H
15	1/2	89	43
20	3/4	92	48
25	1	102	50
32	1.1/4	105	98
40	1.1/2	110	110
50	2	115	122

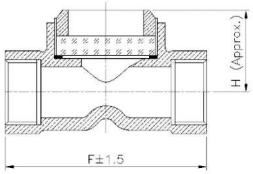

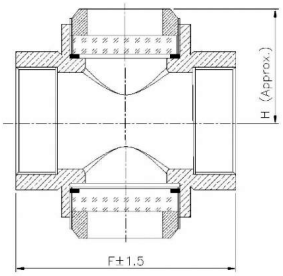

Notes
1. Product images are for illustration purposes only. Actual product may vary.
2. Actual dimensions may change over time, due to continual design improvements. Please confirm before placing order.

Sant Valves Pvt. Ltd.
G.T.Road Bye Pass,
Jalandhar – 144012. Punjab. INDIA
https://www.santvalves.com
Phone : +91 181 5084693
Fax: +91 181 5062270
Email : info@santvalves.com

SANT VALVES
SINCE 1953

ISO 9001 CERTIFIED COMPANY

IBR-16 Bronze Parallel Slide Blow Off Valve Flanged (IBR Approved)

Product Description

HSN 84818030

Product : ‘SANT’ Bronze Parallel Slide Blow off Valve
Body Material cum Standard : Bronze IBR 282(a)(iv) Gr.B
Description : Rack & Pinion Operated with Key
Type of Seat : Renewable seat
Type of Disc : Renewable disc
Trim : SS AISI410 / Monel
Gland Packing : Graphited Asbestos
End Details : Flanges as per BS 10 Table H F.F. undrilled

Testing & Certification

Body Test Pressure : 500 Psig.Hyd.
Seat Test Pressure : 500 Psig.Hyd.
Working Pressure : Max.BOP 250 Psig.(17.58Kg/cm²)
Maximum Working Temperature : 435°F (225°C)

Test Certificate in Form III-C as per IBR is furnished with every supply.

Application

Water	Steam

Materials of Construction

Components	Materials	Specifications
Body, Bonnet, Stuffing Box, Gland, Rack & Pinion	Bronze	IBR 282(a)(iv) Gr.B
Body Seat Ring & Valve Disc	Cast Monel	Ni-Cu Alloy
Spring	Spring Steel	IBR 307 to 314
Gasket	Compressed Asbestos Fibre	IS:2712 Gr.C
Gland Packing	Graphited Asbestos	—
Operating Key	Mild Steel	—

Dimensions (in mm)

Nominal Size	Size (Inches)	F	A		B
25	1	174.5	95		18
32	1.1/4	178	114		19
40	1.1/2	190.5	118		20.5
50	2	206.5	137		25.4
65	2.1/2	228.5	152		28.5
80	3	254	187		32

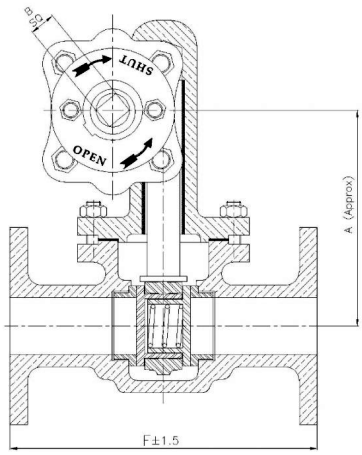

Notes
1. Product images are for illustration purposes only. Actual product may vary.
2. Actual dimensions may change over time, due to continual design improvements. Please confirm before placing order.

Sant Valves Pvt. Ltd.
G.T.Road Bye Pass,
Jalandhar – 144012. Punjab. INDIA
https://www.santvalves.com
Phone : +91 181 5084693
Fax: +91 181 5062270
Email : info@santvalves.com

SANT VALVES
SINCE 1953

I.B.R LISTED FM APPROVED

ISO 9001 CERTIFIED COMPANY

IBR-17A Bronze Pressure Reducing Valve Rubber Diaphragm, For Water / Air Service

Product Description

HSN 84811000

Product : 'SANT' Bronze Pressure Reducing Valve
Body Material cum Standard : Gun Metal (IS:318 Gr.LTB2)
Description : Spring Loaded outlet pressure range available 5/60, 20/80, 40/125 Psig
Type of Seat : Integral
Type of Disc : Renewable disc
Trim : Rubber Diaphragm
End Details : Screwed female BSP Parallel threads to BS 21.

Testing & Certification

Hydraulic Test Pressure : 500 Psig.Hyd.
Working Pressure : Max. Inlet 250 Psig. & Service Temp 50°C (Suitable for Water & Air)
Performance Test is carried out on compressed air line on all valves

Test Certificate in Form III-C as per IBR is furnished with every supply.

Application

Water	Gas

Materials of Construction

Components	Materials	Specifications
Body, Bottom Cover, Drain Plug, Disc Holder, Valve Stem & Spring Disc	Bronze / Gun Metal	IS:318 Gr.LTB2
Diaphragm Cover, Adjusting Screw	Cast Iron	IS:210 Gr.FG200
Diaphragm & Valve Disc	Rubber	Synthetic
Spring	Spring Steel	EN44 or equivalent
Tommy Bar & Fastener	Mild Steel	—

Dimensions (in mm)

Nominal Size	Nominal Size (Inches)	F	H	B
15	1/2	76	155	60
20	3/4	110	165	75
25	1	115	175	85
32	1.1/4	140	220	95
40	1.1/2	140	220	95
50	2	170	315	130

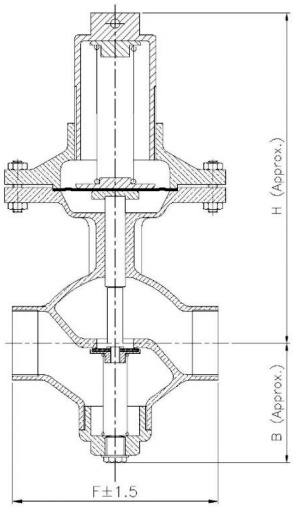

Notes
1. Product images are for illustration purposes only. Actual product may vary.
2. Actual dimensions may change over time, due to continual design improvements. Please confirm before placing order.

Sant Valves Pvt. Ltd.
G.T.Road Bye Pass,
Jalandhar – 144012. Punjab. INDIA

https://www.santvalves.com

Phone : +91 181 5084693
Fax: +91 181 5062270
Email : info@santvalves.com

SANT VALVES
SINCE 1953

I.B.R ISI UL LISTED FM APPROVED

ISO 9001 CERTIFIED COMPANY

IBR-17 Bronze Pressure Reducing Valve Diaphragm Type (IBR Approved)

Product Description

HSN 84811000

Product : ‘SANT’ Bronze Pressure Reducing Valve
Body Material cum Standard : Bronze IBR 282(a)(iv) Gr.B
Description : Spring Loaded outlet pressure range available 5/60, 20/80, 40/125 Psig
Type of Seat : Integral
Type of Disc : Renewable disc
Trim : SS AISI304 Diaphragm
End Details : Screwed female BSP Taper threads to BS 21.

Testing & Certification

Hydraulic Test Pressure : 500 Psig.Hyd.
Working Pressure : Max. Inlet 250 Psig.(17.58Kg/cm²)
Maximum Working Temperature : 435°F (225°C)
Performance Test is carried out on live steam on all valves.

Test Certificate in Form III-C as per IBR is furnished with every supply.

Application

Water	Gas	Steam

Materials of Construction

Components	Materials	Specifications
Body,Valve Disc,Spring Disc,Drain Cover & Plug	Bronze	IBR 282(a)(iv) Gr.B
Diaphragm Cover, Spring Chamber	Cast Iron	IBR 86 to 93 Gr.A
Diaphragm	Stainless Steel	AISI304
Spring	Spring Steel	IBR 307 to 314
Gasket	Compressed Asbestos Fibre	IS:2712 Gr.C
Pressure Adjusting Screw, Tommy Bar & Fastener	Mild Steel	—

Dimensions (in mm)

Nominal Size	Nominal Size (Inches)	F	H	
15	1/2	76	250	
20	3/4	111	282	
25	1	114	336	
32	1.1/4	133	420	
40	1.1/2	137	422	
50	2	170	495	

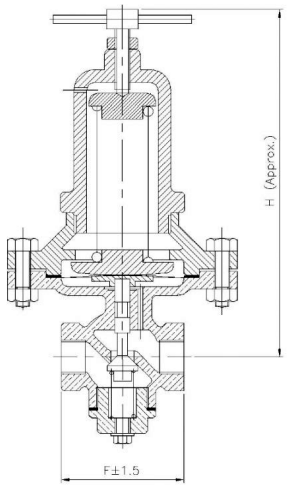

Notes
1. Product images are for illustration purposes only. Actual product may vary.
2. Actual dimensions may change over time, due to continual design improvements. Please confirm before placing order.

Sant Valves Pvt. Ltd.
G.T.Road Bye Pass,
Jalandhar – 144012. Punjab. INDIA
https://www.santvalves.com
Phone : +91 181 5084693
Fax: +91 181 5062270
Email : info@santvalves.com

SANT VALVES
SINCE 1953

I.B.R | ISI | UL LISTED | FM APPROVED

ISO 9001 CERTIFIED COMPANY

IBR-18 Bronze Accessible Feed Check Valve Flanged, Straight Inlet / Curved Inlet (IBR Approved)

Product Description

HSN 84813000

Product : ‘SANT’ Bronze Accessible Feed Check Valve
Body Material cum Standard : Bronze IBR 282(a)(iv) Gr.B
Description : Right Angle Body Straight Inlet / Curved Inlet
Type of Seat : Renewable seat
Type of Disc : Renewable disc
Trim : SS AISI410 / Monel
Gland Packing : Expanded Pure Flexible Graphite
End Details : Flanges as per BS 10 Table H F.F. undrilled

Testing & Certification

Hydraulic Test Pressure : 500 Psig.Hyd.
Working Pressure : Max.BOP 250 Psig.(17.58Kg/cm²)
Maximum Working Temperature : 435°F (225°C)

Test Certificate in Form III-C as per IBR is furnished with every supply.

Application

Water	Steam

Materials of Construction

Components	Materials	Specifications
Body, Bonnet, Check Nut & Gland	Bronze	IBR 282(a)(iv) Gr.B
Body Seat Ring, Valve Disc	S.S.	AISI-410
Stem	Stainless Steel	AISI-410
Gland Packing	Expanded Pure Flexible Graphite	—
Fasteners	Mild Steel	—
Handwheel	Cast Iron	IBR 86 to 93 Gr.A
Nut & Washer for Handwheel	Mild Steel	—

Dimensions (in mm)

Nominal Size	Size (Inches)	A	B			H	W
20	3/4	65	125			120	70
25	1	115	150			140	100
32	1.1/4	112	160			160	115
40	1.1/2	102	142			203	125
50	2	102	170			203	145

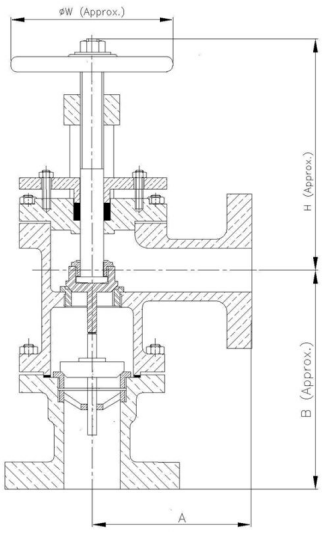

Notes
1. Product images are for illustration purposes only. Actual product may vary.

Sant Valves Pvt. Ltd.
G.T.Road Bye Pass,
Jalandhar – 144012. Punjab. INDIA
https://www.santvalves.com
Phone : +91 181 5084693
Fax: +91 181 5062270
Email : info@santvalves.com

SANT VALVES
SINCE 1953

ISO 9001 CERTIFIED COMPANY

IBR-19 Bronze Inspectors Test Gauge Valve (IBR Approved)

Product Description

HSN 84818030

Product : ‘SANT’ Bronze Inspectors Test Gauge Valve with bend
Body Material cum Standard : Bronze IBR 282(a)(iv) Gr.B
Description : M 20 x 1.5 Pitch threads for Gauge connections
End Details : Screwed female BSP Parallel threads to BS 21.

Testing & Certification

Hydraulic Test Pressure : 500 Psig.Hyd.
Working Pressure : Max.BOP 250 Psig.(17.58Kg/cm²)
Maximum Working Temperature : 435°F (225°C)

Test Certificate in Form III-C as per IBR is furnished with every supply.

Application

Water	Steam

Materials of Construction

Components	Materials	Specifications
Body, Plug, Nut & Nipples, Washers	Bronze	IBR 282(a)(iv) Gr.B
Seal Under Inspector’s Connection Plug	Lead	—

Dimensions (in mm)

Nominal Size	Nominal Size (Inches)	A (Approx.)	B (Approx.)
10	3/8	82.5	140
15	1/2	82.5	140

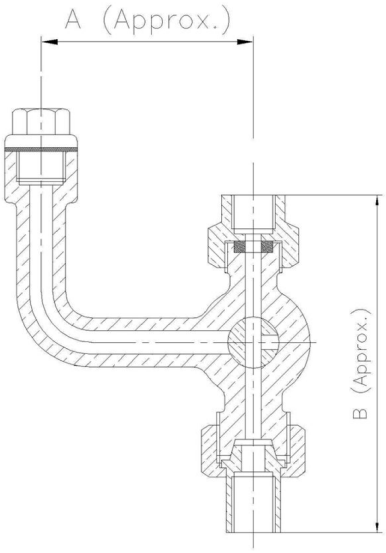

Notes
1. Product images are for illustration purposes only. Actual product may vary.
2. Actual dimensions may change over time, due to continual design improvements. Please confirm before placing order.

Sant Valves Pvt. Ltd.
G.T.Road Bye Pass,
Jalandhar – 144012. Punjab. INDIA
https://www.santvalves.com
Phone : +91 181 5084693
Fax: +91 181 5062270
Email : info@santvalves.com

SANT VALVES
SINCE 1953

ISO 9001 CERTIFIED COMPANY

IBR-20 Bronze Thermodynamic Steam Trap (IBR Approved)

Product Description

HSN 84818030

Product : ‘SANT’ Bronze Thermodynamic Steam Trap
Body Material cum Standard : Bronze IBR 282(a)(iv) Gr.B
Description : Thermodynamic type with inbuilt strainer
Trim : SS AISI410
End Details : Screwed female BSP Taper threads to BS 21.

Testing & Certification

Hydraulic Test Pressure : 500 Psig.Hyd.
Steam Test Pressure : 250 Psig.Hyd.
Working Pressure : Max.BOP 250 Psig.(17.58Kg/cm²)
Maximum Working Temperature : 435°F (225°C)

Test Certificate in Form III-C as per IBR is furnished with every supply.

Application

Steam

Materials of Construction

Components	Materials	Specifications
Body	Bronze	IBR 282(a)(iv) Gr.B
Seat, Disc, Covers	Stainless Steel	AISI410
Name Plate	Aluminum Sheet	—
Strainer	Stainless Steel	AISI304

Dimensions (in mm)

Nominal Size	Nominal Size (Inches)	F
15	1/2	78
20	3/4	83
25	1	100

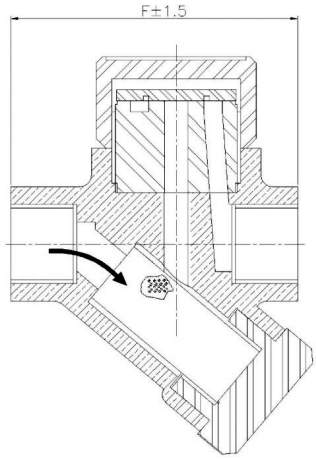

Notes
1. Product images are for illustration purposes only. Actual product may vary.
2. Actual dimensions may change over time, due to continual design improvements. Please confirm before placing order.

Sant Valves Pvt. Ltd.
G.T.Road Bye Pass,
Jalandhar – 144012. Punjab. INDIA

https://www.santvalves.com

Phone : +91 181 5084693
Fax: +91 181 5062270
Email : info@santvalves.com

SANT VALVES
SINCE 1953

ISO 9001 CERTIFIED COMPANY

IBR-21 Bronze Pressure Relief Valve Screwed, Open Discharge

Product Description

HSN 84814000

Product : ‘SANT’ Bronze Relief Valve
Type of Pattern : Straight Type
Body Material cum Standard : GM (IS:318 Gr.LTB2)
Description : Spring Loaded Open Discharge
Type of Seat : Integral seat
Type of Disc : Renewable disc
Trim : Cu-Alloy
End Details : Screwed male BSP Parallel threads to BS 21.

Testing & Certification

Hydraulic Test Pressure : 300 Psig.Hyd.
Note : Please advise set pressure while placing order
Working Pressure : Max.150 Psig.

Our Work’s Test Certificate is furnished with every supply.

Application

Water	Air

Materials of Construction

Components	Materials	Specifications
Body, Spring Chamber, Valve Disc, Spring Discs, Spindle, Check Nut & Adjusting Screw	Leaded Tin Bronze	IS:318 Gr.LTB2
Spring	Spring Steel	—

Dimensions (in mm)

Nominal Size	Nominal Size (Inches)	A (Inches)	H (Approx.)
8	1/4	1/4	160
10	3/8	3/8	160
15	1/2	1/2	160
20	3/4	3/4	170
25	1	1	175
32	1.1/4	1.1/4	215
40	1.1/2	1.1/2	240
50	2	2	265
		BSP	

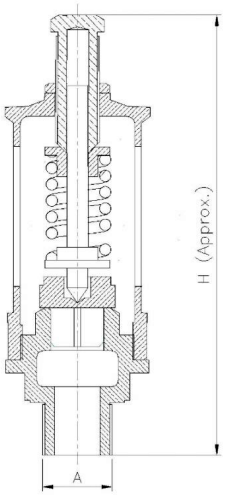

Notes
1. Product images are for illustration purposes only. Actual product may vary.
2. Actual dimensions may change over time, due to continual design improvements. Please confirm before placing order.

Sant Valves Pvt. Ltd.
G.T.Road Bye Pass,
Jalandhar – 144012. Punjab. INDIA
https://www.santvalves.com
Phone : +91 181 5084693
Fax: +91 181 5062270
Email : info@santvalves.com

SANT VALVES
SINCE 1953

I.B.R LISTED FM APPROVED

ISO 9001 CERTIFIED COMPANY

IBR-22 Bronze Pressure Relief Valve Screwed, Angle Type Enclosed Discharge

Product Description

HSN 84814000

Product : ‘SANT’ Bronze Relief Valve
Type of Pattern : Right AngleType
Body Material cum Standard : GM (IS:318 Gr.LTB2)
Description : Spring Loaded Enclosed Discharge
Type of Seat : Integral seat
Type of Disc : Renewable disc
Trim : Cu-Alloy
End Details : Inlet end male BSP Parallel threads outlet female BSP Parallel threads to BS 21.

Testing & Certification

Hydraulic Test Pressure : 300 Psig.Hyd.
Note : Please advise set pressure while placing order
Working Pressure : Max.150 Psig.

Our Work’s Test Certificate is furnished with every supply.

Application

Water	Air

Materials of Construction

Components	Materials	Specifications
Body, Spring Chamber, Valve Disc, Spring Discs, Spindle, Check Nut & Adjusting Screw	Leaded Tin Bronze	IS:318 Gr.LTB2
Spring	Spring Steel	—

Dimensions (in mm)

Nominal Size	Size (Inches)	A (Inches)	B (Inches)	H (Approx.)	C	D
8	1/4	1/4″	1/4″	160	35	61
10	3/8	3/8″	3/8″	160	35	61
15	1/2	1/2″	1/2″	160	35	61
20	3/4	3/4″	3/4″	170	40	73
25	1	1″	1″	175	46	84
32	1.1/4	1.1/4″	1.1/4″	215	54	85
40	1.1/2	1.1/2″	1.1/2″	240	60	95
50	2	2″	2″	265	72	103
		BSP	BSP			

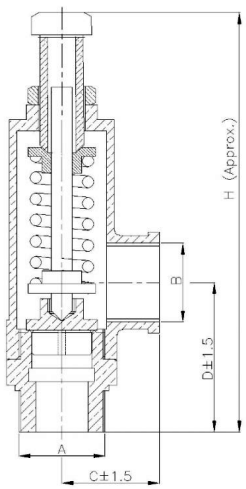

Notes
1. Product images are for illustration purposes only. Actual product may vary.
2. Actual dimensions may change over time, due to continual design improvements. Please confirm before placing order.

Sant Valves Pvt. Ltd.
G.T.Road Bye Pass,
Jalandhar – 144012. Punjab. INDIA
https://www.santvalves.com
Phone : +91 181 5084693
Fax: +91 181 5062270
Email : info@santvalves.com

SANT VALVES
SINCE 1953

I.B.R | ISI | UL LISTED | FM APPROVED

ISO 9001 CERTIFIED COMPANY

IBR-23 Bronze Pilot Operated R Type Pressure Reducing Valve Flanged (IBR Approved)

Product Description

HSN 84811000

Product : 'SANT' Bronze Pilot Operated R Type Pressure Reducing Valve
Body Material cum Standard : Bronze IBR 282(a)(iv) Gr.B
Description : Pilot operated R-type outlet pressure range available 5/60, 20/80, 40/125 Psig.
Type of Seat : Renewable seat
Type of Disc : Renewable disc
Trim : SS AISI410 / Monel
End Details : Flanges as per BS 10 Table H F.F. undrilled

Photo Not Available

Testing & Certification

Body Test Pressure : 500 Psig.Hyd.
Note : Please advise outlet pressure while placing order
Working Pressure : Max.BOP 250 Psig.(17.58Kg/cm²)
Maximum Working Temperature : 435°F (225°C)

Test Certificate in Form III-C as per IBR is furnished with every supply.

Application

Steam

Materials of Construction

Components	Materials	Specifications
Body, Bonnet, Bottom Cover, Guide Spring, Cover, Adjusting Screw, Plugs & Ring	Bronze	IBR 282(a)(iv) Gr.B
Diaphragm	Stainless Steel	AISI304
Springs	Spring Steel	IBR 307 to 314
Nipples, Pilot Valve	Stainless Steel	AISI410
Gasket	Compressed Asbestos Fiber	IS:2712 Gr.C
Piston Rings	Manganese Bronze	—
Body Seat Ring, Main Valve, Liner	S.S./Cast Monel	AISI-410/Ni-Cu Alloy
Strainers	SS	AISI304
Fasteners	Mild Steel	—
Cap	Aluminum Casting	—

Dimensions (in mm)

Nominal Size	Nominal Size (Inches)	F	A (approx.)	B (Approx.)
25	1	121	300	86
32	1.1/4	143	330	92
40	1.1/2	143	330	95
50	2	191	410	125

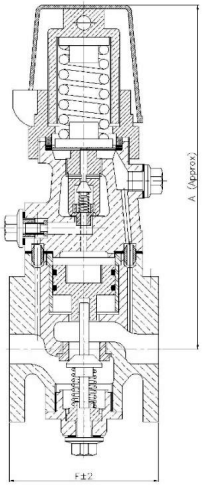

Sant Valves Pvt. Ltd.
G.T.Road Bye Pass,
Jalandhar – 144012. Punjab. INDIA

https://www.santvalves.com

Phone : +91 181 5084693
Fax: +91 181 5062270
Email : info@santvalves.com

SANT VALVES
SINCE 1953

ISO 9001 CERTIFIED COMPANY

IBR-24 Bronze Safety Valve Screwed, Enclosed Discharge (IBR Approved)

Product Description

HSN 84814000

Product : ‘SANT’ Bronze Safety Valve
Type of Pattern : Right Angle
Body Material cum Standard : Bronze IBR 282(a)(iv) Gr.B
Description : Spring Loaded Enclosed Discharge
Type of Seat : Integral seat
Type of Disc : Renewable disc
Trim : Cu-Alloy
End Details : Inlet end male BSP Taper threads outlet female BSP threads to BS 21.

Photo Not Available

Testing & Certification

Body Test Pressure : 300 Psig.Hyd.
Note : Please advise set pressure while placing order
Working Pressure : Max.BOP 150 Psig.(10.54Kg/cm²)
Maximum Working Temperature : 435°F (225°C)

Test Certificate in Form III-C as per IBR is furnished with every supply.

Application

Gas	Steam

Materials of Construction

Components	Materials	Specifications
Body, Spring Chamber, Valve Disc, Blow-down Ring, Spring Discs, Adjusting Screw, Check Nut & Cap	Bronze	IBR 282(a)(iv) Gr.B
Spindle & Screws	Forged Brass	IS:6912 FLB
Spring	Spring Steel	—
Easing Lever	Cast Iron	IBR-86-93 Gr-A
Pins	Brass	—

Dimensions (in mm)

Nominal Size	Size (Inches)	A (Inches)	B	C	H
15	1/2	1/2″	40	52	123
20	3/4	3/4″	45	62	143
25	1	1″	55	80	150
40	1.1/2	1.1/2″	66	92	178
50	2	2″	80	120	245
		BSP			

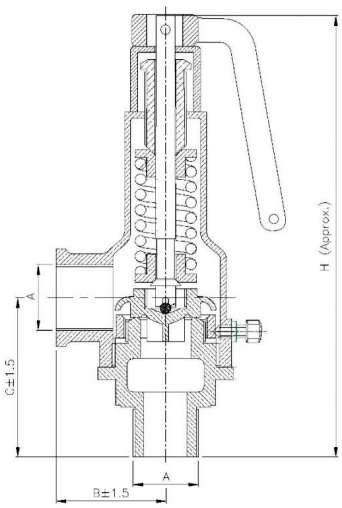

Notes
1. Product images are for illustration purposes only. Actual product may vary.
2. Actual dimensions may change over time, due to continual design improvements. Please confirm before placing order.

Sant Valves Pvt. Ltd.
G.T.Road Bye Pass,
Jalandhar – 144012. Punjab. INDIA
https://www.santvalves.com
Phone : +91 181 5084693
Fax: +91 181 5062270
Email : info@santvalves.com

SANT VALVES
SINCE 1953

I.B.R LISTED FM APPROVED

ISO 9001 CERTIFIED COMPANY

IBR-25 Bronze Safety Valve Screwed, Open Discharge (IBR Approved)

Product Description

HSN 84814000

Product : ‘SANT’ Bronze Safety Valve
Type of Pattern : Straight Type
Body Material cum Standard : Bronze IBR 282(a)(iv) Gr.B
Description : Spring Loaded Open Discharge
Type of Seat : Integral seat
Type of Disc : Renewable disc
Trim : Cu-Alloy
End Details : Inlet threads male BSP Taper to BS-21

Testing & Certification

Body Test Pressure : 300 Psig.Hyd.
Note : Please advise set pressure while placing order
Working Pressure : Max.BOP 150 Psig.(10.54Kg/cm²)
Maximum Working Temperature : 435°F (225°C)

Test Certificate in Form III-C as per IBR is furnished with every supply.

Application

Gas	Steam

Materials of Construction

Components	Materials	Specifications
Body, Spring Chamber, Valve Disc, Blow-down Ring, Spring Discs, Adjusting Screw, Check Nut & Cap	Bronze	IBR 282(a)(iv) Gr.B
Spindle & Screws	Forged Brass	IS:6912 FLB
Spring	Spring Steel	
Easing Lever	Cast Iron	IBR 86-93 Gr.A
Pins	Brass	—

Dimensions (in mm)

Nominal Size	Nominal Size (Inches)	A (Inches)	H
15	1/2	1/2″	175
20	3/4	3/4″	205
25	1	1″	230
40	1.1/2	1.1/2″	260
50	2	2″	350
		BSPT	

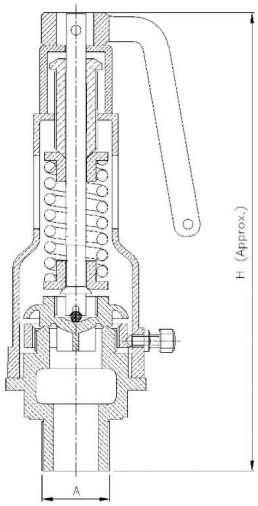

Notes
1. Product images are for illustration purposes only. Actual product may vary.
2. Actual dimensions may change over time, due to continual design improvements. Please confirm before placing order.

Sant Valves Pvt. Ltd.
G.T.Road Bye Pass,
Jalandhar – 144012. Punjab. INDIA

https://www.santvalves.com

Phone : +91 181 5084693
Fax: +91 181 5062270
Email : info@santvalves.com

SANT VALVES
SINCE 1953

I.B.R | ISI | UL LISTED | FM APPROVED

ISO 9001 CERTIFIED COMPANY

IBR-26 Bronze Mobrey Valve Flanged (IBR Approved)

Product Description

HSN 84818030

Product : ‘SANT’ Bronze Mobrey Valve
Type of Pattern : Right Angle
Body Material cum Standard : Bronze IBR 282(a)(iv) Gr.B
Description : Screwed in bonnet inside screw rising stem
Type of Seat : Renewable seat
Type of Disc : Renewable disc
Trim : SS AISI-410
Gland Packing : Expanded Pure Flexible Graphite
End Details : Flanges as per BS 10 Table H F.F. undrilled

Testing & Certification

Body Test Pressure : 500 Psig.Hyd.
Working Pressure : Max.BOP 250 Psig.(17.58Kg/cm²)
Maximum Working Temperature : 435°F (225°C)

Test Certificate in Form III-C as per IBR is furnished with every supply.

Application

Water	Steam

Materials of Construction

Components	Materials	Specifications
Body, Bonnet, Gland, Gland Nut, Plug & Check Nut	Bronze	IBR 282(a)(iv) Gr.B
Body Ring, Valve Disc and Stem	Stainless Steel	AISI410
Wheel	Cast Iron	IBR 86-93 Gr.A
Lock Washer	Brass	—
Gland Packing	Expanded Pure Flexible Graphite	—

Dimensions (in mm)

Nominal Size	Nominal Size (Inches)	B	H	W
25	1	83	127	95

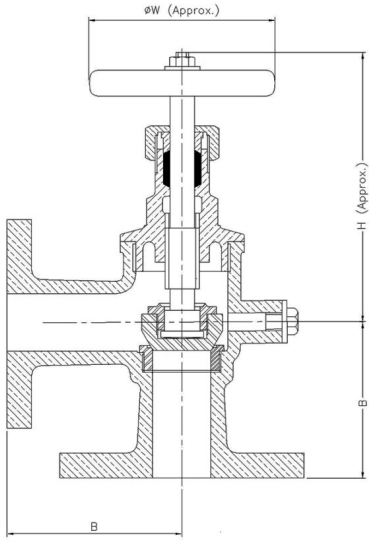

Notes
1. Product images are for illustration purposes only. Actual product may vary.
2. Actual dimensions may change over time, due to continual design improvements. Please confirm before placing order.

Sant Valves Pvt. Ltd.
G.T.Road Bye Pass,
Jalandhar – 144012. Punjab. INDIA
https://www.santvalves.com
Phone : +91 181 5084693
Fax: +91 181 5062270
Email : info@santvalves.com

SANT VALVES
SINCE 1953

ISO 9001 CERTIFIED COMPANY

IBR-27 Bronze Loco Type Fusible Plug

Product Description

HSN 84814000

Product : Sant Bronze Loco Type Fusible Plug
Body Material cum standard : Bronze IBR Clause 282 (a) IV GrB
Product Description : Loco Type two piece design
End Details : Male BSP Taper Threads to BS-21

Testing & Certification

Test Pressure : Tested to 500Psig. Hyd. (35.15 kg/cm² (Hyd.)
Working Pressure : Max. BOP 250Psig.(17.58kg/cm²)
Maximum Working Temperature : 435°F (225°C)

Materials of Construction

Components	Materials	Specifications
Body, Cone	Bronze	IBR 282(a)(iv) Gr.B
Fusible Alloy	Lead-Tin Alloy	—

Dimensions (in mm)

Nominal Size	Nominal Size (Inches)	H (Approx.)
25	1	52
32	1 1/4	52

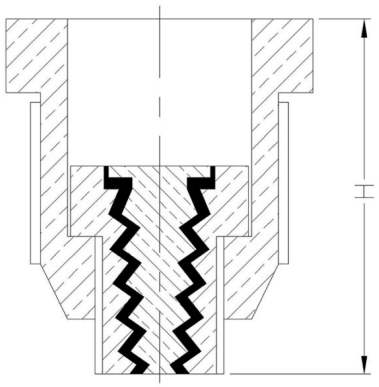

Notes
1. Product images are for illustration purposes only. Actual product may vary.
2. Actual dimensions may change over time, due to continual design improvements. Please confirm before placing order.

Sant Valves Pvt. Ltd.
G.T.Road Bye Pass,
Jalandhar – 144012. Punjab. INDIA

https://www.santvalves.com

Phone : +91 181 5084693
Fax: +91 181 5062270
Email : info@santvalves.com

SANT VALVES
SINCE 1953

I.B.R ISI UL LISTED FM APPROVED

ISO 9001 CERTIFIED COMPANY

IS-1 Bronze Gate Valve Non-Rising Stem, Screwed, IS : 778 Class-1 (ISI Marked)

Product Description

HSN 84818030

Product : ‘SANT’ Bronze Gate Valve
Product Standard : IS-778
Pressure/Class/Rating : Class-1
Body Material cum Standard : GM (IS:318 Gr.LTB2)
Description : Screwed in Bonnet, Inside Screw, Non-Rising Stem
Type of Seat : Integral seat
Type of Wedge : Solid wedge
Trim : Cu-Alloy
Gland Packing : PTFE
End Details : Screwed female threads to IS:554 Parallel

Testing & Certification

Body Test Pressure : 1.5 MPa Hyd.
Seat & Back Seat Test Pressure : 1.0 MPa Hyd.
Max Working Temperature: 45°C

Our Works’ Test Certificate is furnished with every supply.

Application

Water	Oil

Materials of Construction

Components	Materials	Specifications
Body, Bonnet, Wedge, Stuffing Box, Gland & Gland Nut	Gun Metal / Leaded Tin Bronze	IS:318 Gr.LTB2
Stem	Forged Brass	IS:6912 Gr.FLB
Handwheel	Cast Iron / Steel	IS:210 Gr.FG200
Gland Packing	PTFE	—-
Screw & Washer for Handwheel	Mild Steel	—-

Dimensions (in mm)

Nominal Size	Nominal Size (Inches)	F	H (Approx.)	ØW (Approx.)
8	1/4	50±1.5	80	50
10	3/8	50±1.5	90	50
15	1/2	60±1.5	105	60
20	3/4	60±1.5	110	60
25	1	70±1.5	125	65
32	1.1/4	80±1.5	140	85
40	1.1/2	90±1.5	160	90
50	2	100±1.5	175	90
65	2.1/2	105±1.5	215	105
80	3	125±1.5	250	115
100	4	160±1.5	315	145

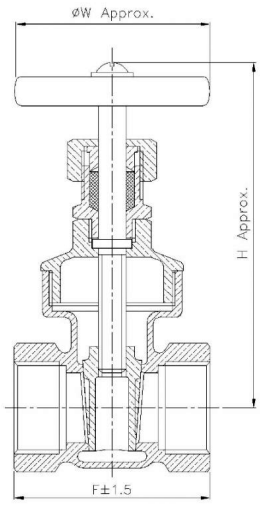

Notes
1. Product images are for illustration purposes only. Actual product may vary.
2. Actual dimensions may change over time, due to continual design improvements. Please confirm before placing order.

Sant Valves Pvt. Ltd.
G.T.Road Bye Pass,
Jalandhar – 144012. Punjab. INDIA
https://www.santvalves.com
Phone : +91 181 5084693
Fax: +91 181 5062270
Email : info@santvalves.com

SANT VALVES
SINCE 1953

I.B.R ISI UL LISTED FM APPROVED

ISO 9001 CERTIFIED COMPANY

IS-2 Bronze Gate Valve Non-Rising Stem, Flanged, IS : 778 Class-1 (ISI Marked)

Product Description

HSN 84818030

Product : ‘SANT’ Bronze Gate Valve
Product Standard : IS-778
Pressure/Class/Rating : Class-1
Body Material cum Standard : GM (IS:318 Gr.LTB2)
Description : Screwed in Bonnet, Inside Screw, Non-Rising Stem
Type of Seat : Integral seat
Type of Wedge : Solid wedge
Trim : Cu-Alloy
Gland Packing : PTFE
End Details : Flanges as per IS:778 Class-1 F.F. undrilled

Testing & Certification

Body Test Pressure : 1.5 MPa Hyd.
Seat & Back Seat Test Pressure : 1.0 MPa Hyd.
Max Working Temperature: 45°C

Our Works’ Test Certificate is furnished with every supply.

Application

Water	Oil

Materials of Construction

Components	Materials	Specifications
Body, Bonnet, Wedge, Stuffing Box, Gland & Gland Nut	Leaded Tin Bronze	IS:318 Gr.LTB2
Stem	Forged Brass	IS:6912 Gr.FLB
Handwheel	Cast Iron / Steel	IS:210 Gr.FG200
Gland Packing	PTFE	—-
Screw & Washer for Handwheel	Mild Steel	—-

Dimensions (in mm)

Nominal Size	Nominal Size (Inches)	F	H (Approx.)	ØW (Approx.)
15	1/2	72±1.5	105	60
20	3/4	76±1.5	110	60
25	1	90±1.5	130	65
32	1.1/4	100±1.5	140	75
40	1.1/2	110±1.5	160	90
50	2	120±1.5	180	90
65	2.1/2	140±1.5	220	140
80	3	150±1.5	250	175
100	4	190±1.5	330	200

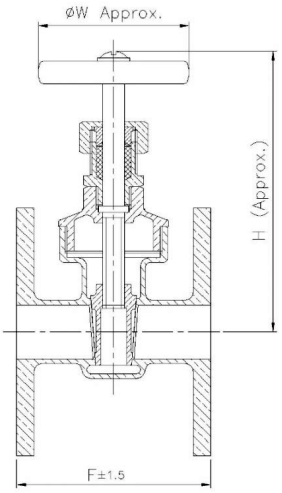

Notes
1. Product images are for illustration purposes only. Actual product may vary.
2. Actual dimensions may change over time, due to continual design improvements. Please confirm before placing order.

Sant Valves Pvt. Ltd.
G.T.Road Bye Pass,
Jalandhar – 144012. Punjab. INDIA
https://www.santvalves.com
Phone : +91 181 5084693
Fax: +91 181 5062270
Email : info@santvalves.com

SANT VALVES
SINCE 1953

I.B.R | ISI | UL LISTED | FM APPROVED

ISO 9001 CERTIFIED COMPANY

IS-3 Bronze Gate Valve Rising Stem, Screwed, IS : 778 Class-1 (ISI Marked)

Product Description

HSN 84818030

Product : ‘SANT’ Bronze Gate Valve
Product Standard : IS-778
Pressure/Class/Rating : Class-1
Body Material cum Standard : GM (IS:318 Gr.LTB2)
Description : Screwed in Bonnet, Inside Screw, Rising Stem
Type of Seat : Integral seat
Type of Wedge : Solid wedge
Trim : Cu-Alloy
Gland Packing : PTFE
End Details : Screwed female threads to IS:554 Parallel

Testing & Certification

Body Test Pressure : 1.5 MPa Hyd.
Seat & Back Seat Test Pressure : 1.0 MPa Hyd.
Max Working Temperature: 45°C

Our Works’ Test Certificate is furnished with every supply.

Application

Water	Oil

Materials of Construction

Components	Materials	Specifications
Body, Bonnet, Wedge, Stuffing Box, Gland & Gland Nut	Leaded Tin Bronze	IS:318 Gr.LTB2
Stem	Forged Brass	IS:6912 Gr.FLB
Handwheel	Cast Iron / Steel	IS:210 Gr.FG200
Gland Packing	PTFE	—-
Screw & Washer for Handwheel	Mild Steel	—-

Dimensions (in mm)

Nominal Size	Nominal Size (Inches)	F	H (Approx.)	ØW (Approx.)
8	1/4	50±1.5	105	50
10	3/8	50±1.5	105	50
15	1/2	60±1.5	130	60
20	3/4	60±1.5	145	60
25	1	70±1.5	165	65
32	1.1/4	80±1.5	180	75
40	1.1/2	90±1.5	210	90
50	2	100±1.5	250	100
65	2.1/2	105±1.5	300	105
80	3	125±1.5	380	120
100	4	160±1.5	480	145

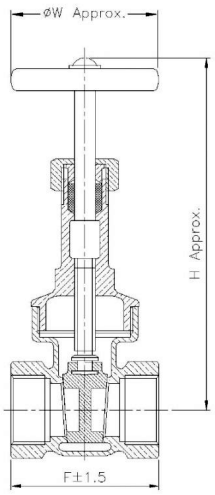

Notes
1. Product images are for illustration purposes only. Actual product may vary.
2. Actual dimensions may change over time, due to continual design improvements. Please confirm before placing order.

Sant Valves Pvt. Ltd.
G.T.Road Bye Pass,
Jalandhar – 144012. Punjab. INDIA
https://www.santvalves.com
Phone : +91 181 5084693
Fax: +91 181 5062270
Email : info@santvalves.com

SANT VALVES
SINCE 1953

I.B.R | ISI | UL LISTED | FM APPROVED

ISO 9001 CERTIFIED COMPANY

IS-4 Bronze Gate Valve Rising Stem, Flanged, IS : 778 Class-1 (ISI Marked)

Product Description

HSN 84818030

Product : ‘SANT’ Bronze Gate Valve
Product Standard : IS-778
Pressure/Class/Rating : Class-1
Body Material cum Standard : GM (IS:318 Gr.LTB2)
Description : Screwed in Bonnet, Inside Screw, Rising Stem
Type of Seat : Integral seat
Type of Wedge : Solid wedge
Trim : Cu-Alloy
Gland Packing : PTFE
End Details : Flanges as per IS:778 Class-1 F.F. undrilled

Testing & Certification

Body Test Pressure : 1.5 MPa Hyd.
Seat & Back Seat Test Pressure : 1.0 MPa Hyd.
Max Working Temperature: 45°C

Our Works’ Test Certificate is furnished with every supply.

Application

Water	Oil

Materials of Construction

Components	Materials	Specifications
Body, Bonnet, Wedge, Stuffing Box, Gland & Gland Nut	Leaded Tin Bronze	IS:318 Gr.LTB2
Stem	Forged Brass	IS:6912 Gr.FLB
Handwheel	Cast Iron / Steel	IS:210 Gr.FG200
Gland Packing	PTFE	—-
Screw & Washer for Handwheel	Mild Steel	—-

Dimensions (in mm)

Nominal Size	Nominal Size (Inches)	F	H (Approx.)	ØW (Approx.)
15	1/2	72±1.5	130	60
20	3/4	76±1.5	145	60
25	1	90±1.5	165	65
32	1.1/4	100±1.5	200	70
40	1.1/2	110±1.5	210	90
50	2	120±1.5	250	90
65	2.1/2	140±1.5	300	140
80	3	150±1.5	380	175
100	4	190±1.5	480	200

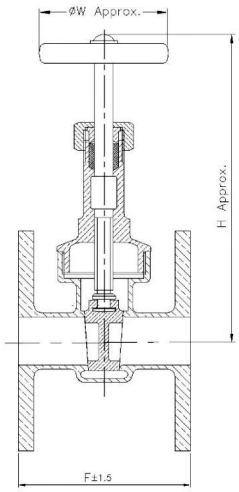

Notes
1. Product images are for illustration purposes only. Actual product may vary.
2. Actual dimensions may change over time, due to continual design improvements. Please confirm before placing order.

Sant Valves Pvt. Ltd.
G.T.Road Bye Pass,
Jalandhar – 144012. Punjab. INDIA
https://www.santvalves.com
Phone : +91 181 5084693
Fax: +91 181 5062270
Email : info@santvalves.com

SANT VALVES
SINCE 1953

I.B.R LISTED FM APPROVED

ISO 9001 CERTIFIED COMPANY

IS-5A Bronze Gate Valve Rising Stem, Screwed, IS : 778 Class-2 (ISI Marked)

Product Description

HSN 84818030

Product : 'SANT' Bronze Gate Valve
Product Standard : IS-778
Pressure/Class/Rating : Class-2
Body Material cum Standard : GM (IS:318 Gr.LTB2)
Description : Screwed in Bonnet, Inside Screw, Rising Stem
Type of Seat : Integral seat
Type of Wedge : Solid wedge
Trim : Cu-Alloy
Gland Packing : PTFE
End Details : Screwed female threads to IS:554 Parallel

Photo Not Available

Testing & Certification

Body Test Pressure : 2.4 MPa Hyd.
Seat & Back Seat Test Pressure : 1.6 MPa Hyd.
Max Working Temperature: 45°C

Our Works' Test Certificate is furnished with every supply.

Application

Water	Oil

Materials of Construction

Components	Materials	Specifications
Body, Bonnet, Wedge, Stuffing Box, Gland & Gland Nut	Gun Metal / Leaded Tin Bronze	IS:318 Gr.LTB2
Stem	Forged Brass	IS:6912 Gr.FLB
Handwheel	Cast Iron / Steel	IS:210 Gr.FG200
Gland Packing	PTFE	—-
Screw & Washer for Handwheel	Mild Steel	—-

Dimensions (in mm)

Nominal Size	Nominal Size (Inches)	F	H (Approx.)	ØW (Approx.)
15	1/2	60±1.5	130	60
20	3/4	60±1.5	145	60
25	1	70±1.5	165	65
32	1.1/4	80±1.5	180	85
40	1.1/2	90±1.5	210	90
50	2	100±1.5	250	90
65	2.1/2	105±1.5	300	105
80	3	125±1.5	380	120
100	4	160±1.5	480	145

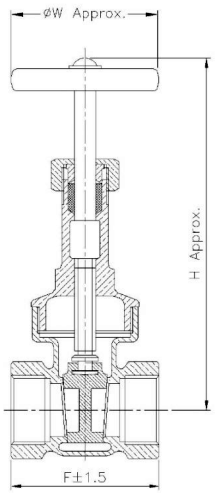

Notes
1. Product images are for illustration purposes only. Actual product may vary.
2. Actual dimensions may change over time, due to continual design improvements. Please confirm before placing order.

Sant Valves Pvt. Ltd.
G.T.Road Bye Pass,
Jalandhar – 144012. Punjab. INDIA
https://www.santvalves.com
Phone : +91 181 5084693
Fax: +91 181 5062270
Email : info@santvalves.com

SANT VALVES
SINCE 1953

I.B.R | ISI | UL LISTED | FM APPROVED

ISO 9001 CERTIFIED COMPANY

IS-5 Bronze Gate Valve Non-Rising Stem, Screwed, IS : 778 Class-2 (ISI Marked)

Product Description

HSN 84818030

Product : 'SANT' Bronze Gate Valve
Product Standard : IS-778
Pressure/Class/Rating : Class-2
Body Material cum Standard : GM (IS:318 Gr.LTB2)
Description : Screwed in Bonnet, Inside Screw, Non-Rising Stem
Type of Seat : Integral seat
Type of Wedge : Solid wedge
Trim : Cu-Alloy
Gland Packing : PTFE
End Details : Screwed female threads to IS:554 Parallel

Testing & Certification

Body Test Pressure : 2.4 MPa Hyd.
Seat & Back Seat Test Pressure : 1.6 MPa Hyd.
Max Working Temperature: 45°C

Our Works' Test Certificate is furnished with every supply.

Application

Water	Oil

Materials of Construction

Components	Materials	Specifications
Body, Bonnet, Wedge, Stuffing Box, Gland & Gland Nut	Leaded Tin Bronze	IS:318 Gr.LTB2
Stem	Forged Brass	IS:6912 Gr.FLB
Handwheel	Cast Iron / Steel	IS:210 Gr.FG200
Gland Packing	PTFE	—-
Screw & Washer for Handwheel	Mild Steel	—-

Dimensions (in mm)

Nominal Size	Nominal Size (Inches)	F	H (Approx.)	ØW (Approx.)
15	1/2	60±1.5	105	60
20	3/4	60±1.5	115	60
25	1	70±1.5	125	65
32	1.1/4	80±1.5	140	75
40	1.1/2	90±1.5	160	90
50	2	100±1.5	180	90
65	2.1/2	105±1.5	220	105
80	3	125±1.5	250	115
100	4	160±1.5	320	145

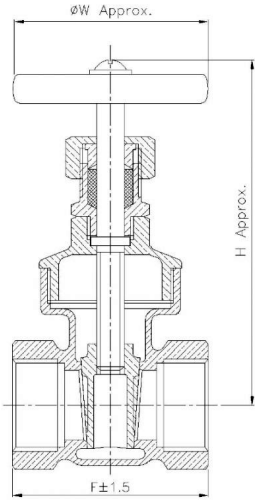

Notes
1. Product images are for illustration purposes only. Actual product may vary.
2. Actual dimensions may change over time, due to continual design improvements. Please confirm before placing order.

Sant Valves Pvt. Ltd.
G.T.Road Bye Pass,
Jalandhar – 144012. Punjab. INDIA

https://www.santvalves.com

Phone : +91 181 5084693
Fax: +91 181 5062270
Email : info@santvalves.com

SANT VALVES
SINCE 1953

ISO 9001 CERTIFIED COMPANY

IS-6A Bronze Gate Valve Rising Stem, Flanged, IS : 778 Class-2 (ISI Marked)

Product Description

HSN 84818030

Product : ‘SANT’ Bronze Gate Valve
Product Standard : IS-778
Pressure/Class/Rating : Class-2
Body Material cum Standard : GM (IS:318 Gr.LTB2)
Description : Screwed in Bonnet, Inside Screw, Rising Stem
Type of Seat : Integral seat
Type of Wedge : Solid wedge
Trim : Cu-Alloy
Gland Packing : PTFE
End Details : Flanges as per IS:778 Class-2 F.F. undrilled

Photo Not Available

Testing & Certification

Body Test Pressure : 2.4 MPa Hyd.
Seat & Back Seat Test Pressure : 1.6 MPa Hyd.
Max Working Temperature: 45°C

Our Works’ Test Certificate is furnished with every supply.

Application

Water	Oil

Materials of Construction

Components	Materials	Specifications
Body, Bonnet, Wedge, Stuffing Box, Gland & Gland Nut	Leaded Tin Bronze	IS:318 Gr.LTB2
Stem	Forged Brass	IS:6912 FLB
Handwheel	Cast Iron / Steel	IS:210 Gr.FG200 / IS:513
Gland Packing	PTFE	
Screw & Washer for Handwheel	Mild Steel	IS:1367 / IS:513

Dimensions (in mm)

Nominal Size	Nominal Size (Inches)	F	H (Approx.)	ØW (Approx.)
15	1/2	72±1.5	130	60
20	3/4	76±1.5	145	60
25	1	90±1.5	165	65
32	1.1/4	100±1.5	180	70
40	1.1/2	110±1.5	210	90
50	2	120±1.5	250	90
65	2.1/2	140±1.5	300	140
80	3	150±1.5	380	175
100	4	190±1.5	480	200

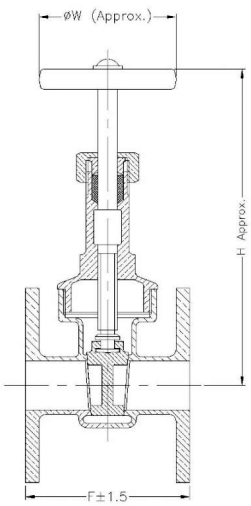

Notes
1. Product images are for illustration purposes only. Actual product may vary.
2. Actual dimensions may change over time, due to continual design improvements. Please confirm before placing order.

Sant Valves Pvt. Ltd.
G.T.Road Bye Pass,
Jalandhar – 144012. Punjab. INDIA
https://www.santvalves.com
Phone : +91 181 5084693
Fax: +91 181 5062270
Email : info@santvalves.com

SANT VALVES
SINCE 1953

I.B.R | ISI | UL LISTED | FM APPROVED

ISO 9001 CERTIFIED COMPANY

IS-6 Bronze Gate Valve Non-Rising Stem, Flanged, IS : 778 Class-2 (ISI Marked)

Product Description

HSN 84818030

Product : 'SANT' Bronze Gate Valve
Product Standard : IS-778
Pressure/Class/Rating : Class-2
Body Material cum Standard : GM (IS:318 Gr.LTB2)
Description : Screwed in Bonnet, Inside Screw, Non-Rising Stem
Type of Seat : Integral seat
Type of Wedge : Solid wedge
Trim : Cu-Alloy
Gland Packing : PTFE
End Details : Flanges as per IS:778 Class-2 F.F. undrilled

Testing & Certification

Body Test Pressure : 2.4 MPa Hyd.
Seat & Back Seat Test Pressure : 1.6 MPa Hyd.
Max Working Temperature: 45°C

Our Works' Test Certificate is furnished with every supply.

Application

Water	Oil

Materials of Construction

Components	Materials	Specifications
Body, Bonnet, Wedge, Stuffing Box, Gland & Gland Nut	Leaded Tin Bronze	IS:318 Gr.LTB2
Stem	Forged Brass	IS:6912 Gr.FLB
Handwheel	Cast Iron / Steel	IS:210 Gr.FG200
Gland Packing	PTFE	—-
Screw & Washer for Handwheel	Mild Steel	—-

Dimensions (in mm)

Nominal Size	Nominal Size (Inches)	F	H (Approx.)	ØW (Approx.)
15	1/2	72±1.5	95	60
20	3/4	76±1.5	125	60
25	1	90±1.5	130	65
32	1.1/4	100±1.5	140	85
40	1.1/2	110±1.5	160	90
50	2	120±1.5	170	90
65	2.1/2	140±1.5	215	140
80	3	150±1.5	255	175
100	4	190±1.5	300	200

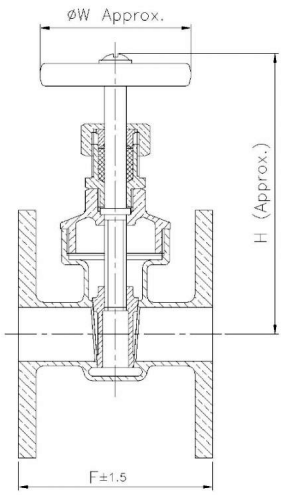

Notes
1. Product images are for illustration purposes only. Actual product may vary.
2. Actual dimensions may change over time, due to continual design improvements. Please confirm before placing order.

Sant Valves Pvt. Ltd.
G.T.Road Bye Pass,
Jalandhar – 144012. Punjab. INDIA
https://www.santvalves.com
Phone : +91 181 5084693
Fax: +91 181 5062270
Email : info@santvalves.com

SANT VALVES
SINCE 1953

I.B.R LISTED FM APPROVED

ISO 9001 CERTIFIED COMPANY

IS-7 Bronze Gate Valve Non-Rising Stem, Screwed, IS - 778 : 1971 Class-3, Non-ISI

Product Description

HSN 84818030

Product : 'SANT' Bronze Gate Valve
Product Standard : IS-778:1971
Pressure/Class/Rating : Class-3
Body Material cum Standard : GM (IS:318 Gr.LTB2)
Description : Screwed in Bonnet, Inside Screw, Non-Rising Stem
Type of Seat : Integral seat
Type of Wedge : Solid wedge
Trim : Cu-Alloy
Gland Packing : PTFE
End Details : Screwed female threads to IS:554 Parallel

Photo Not Available

Testing & Certification

Body Test Pressure : 50 Kg/cm² Hyd.
Seat & Back Seat Test Pressure : 40 Kg/cm² Hyd.
Max Working Temperature: 45°C

Our Works' Test Certificate is furnished with every supply.

Application

Water	Oil

Materials of Construction

Components	Materials	Specifications
Body, Bonnet, Wedge, Stuffing Box, Gland & Gland Nut	Gun Metal / Leaded Tin Bronze	IS:318 Gr.LTB2
Stem	Forged Brass	IS:6912 Gr.FLB
Handwheel	Cast Iron / Steel	IS:210 Gr.FG200
Gland Packing	PTFE	—-
Screw & Washer for Handwheel	Mild Steel	—-

Dimensions (in mm)

Nominal Size	Nominal Size (Inches)	F	H (Approx.)	ØW (Approx.)
15	1/2	83±1.5	110	60
20	3/4	86±1.5	125	65
25	1	100±1.5	135	80
32	1.1/4	120±1.5	155	90
40	1.1/2	120±1.5	185	105
50	2	133±1.5	200	105

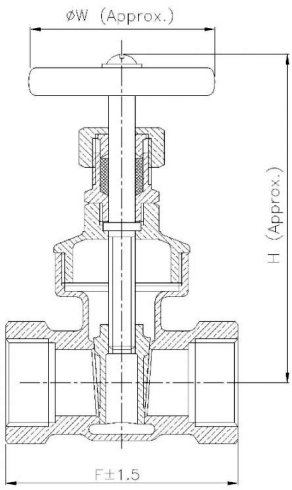

Notes
1. Product images are for illustration purposes only. Actual product may vary.
2. Actual dimensions may change over time, due to continual design improvements. Please confirm before placing order.

Sant Valves Pvt. Ltd.
G.T.Road Bye Pass,
Jalandhar – 144012. Punjab. INDIA
https://www.santvalves.com
Phone : +91 181 5084693
Fax: +91 181 5062270
Email : info@santvalves.com

SANT VALVES
SINCE 1953

ISO 9001 CERTIFIED COMPANY

IS-8 Bronze Vertical Lift Check Valve Screwed, IS : 778 Class-1 (ISI Marked)

Product Description

HSN 84813000

Product : ‘SANT’ Bronze Vertical Lift Check Valve
Product Standard : IS-778
Pressure/Class/Rating : Class-1
Body Material cum Standard : GM (IS:318 Gr.LTB2)
Type of Seat : Integral seat
Trim : Cu-Alloy
End Details : Screwed female threads to IS:554 Parallel

Testing & Certification

Body Test Pressure : 1.5 MPa Hyd.
Seat Test Pressure : 1.0 MPa Hyd.
Max Working Temperature: 45°C

Our Works’ Test Certificate is furnished with every supply.

Application

Water	Oil

Materials of Construction

Components	Materials	Specifications
Body & Valve Disc	Gun Metal / Leaded Tin Bronze	IS:318 Gr.LTB2
Nut & Washer	Forged Brass	IS:6912 FLB
Spring	Phosphor Bronze	—

Dimensions (in mm)

Nominal Size	Nominal Size (Inches)	F
15	1/2	65±1.5
20	3/4	70±1.5
25	1	75±1.5
32	1.1/4	85±1.5
40	1.1/2	95±1.5
50	2	110±1.5
65	2.1/2	130±1.5
80	3	145±1.5
100	4	190±1.5

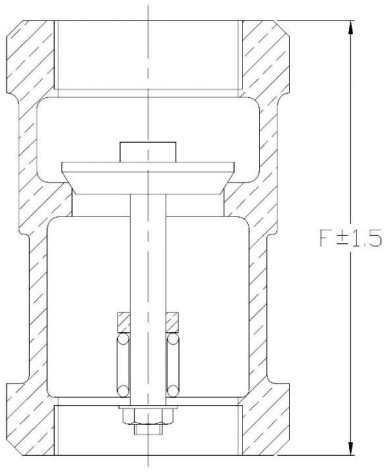

Notes
1. Product images are for illustration purposes only. Actual product may vary.
2. Actual dimensions may change over time, due to continual design improvements. Please confirm before placing order.

Sant Valves Pvt. Ltd.
G.T.Road Bye Pass,
Jalandhar – 144012. Punjab. INDIA

https://www.santvalves.com

Phone : +91 181 5084693
Fax: +91 181 5062270
Email : info@santvalves.com

SANT VALVES
SINCE 1953

I.B.R ISI UL LISTED FM APPROVED

ISO 9001 CERTIFIED COMPANY

IS-9 Bronze Globe Valve Rising Stem, Screwed, IS : 778 Class-1 (ISI Marked)

Product Description

HSN 84818030

Product : ‘SANT’ Bronze Globe Valve
Product Standard : IS-778
Pressure/Class/Rating : Class-1
Body Material cum Standard : GM (IS:318 Gr.LTB2)
Description : Screwed in Bonnet, Inside Screw, Rising Stem
Type of Seat : Integral seat
Trim : Cu-Alloy
Gland Packing : PTFE
End Details : Screwed female threads to IS:554 Parallel

Testing & Certification

Body Test Pressure : 1.5 MPa Hyd.
Seat & Back Seat Test Pressure : 1.0 MPa Hyd.
Max Working Temperature: 45°C

Our Works’ Test Certificate is furnished with every supply.

Application

Water	Oil

Materials of Construction

Components	Materials	Specifications
Body, Bonnet, Disc, Stuffing Box, Gland & Gland Nut, Disc Nut	Leaded Tin Bronze	IS:318 Gr.LTB2
Stem	Forged Brass	IS:6912 Gr.FLB
Handwheel	Cast Iron / Steel	IS:210 Gr.FG200
Gland Packing	PTFE	—-
Screw & Washer for Handwheel	Mild Steel	—-

Dimensions (in mm)

Nominal Size	Nominal Size (Inches)	F	H (Approx.)	ØW (Approx.)
8	1/4	47±1.5	75	50
10	3/8	50±1.5	75	50
15	1/2	60±1.5	85	60
20	3/4	70±1.5	90	60
25	1	80±1.5	115	65
32	1.1/4	95±1.5	120	75
40	1.1/2	110±1.5	130	90
50	2	125±1.5	135	90
65	2.1/2	160±1.5	170	140
80	3	180±1.5	200	175
100	4	216±1.5	230	200

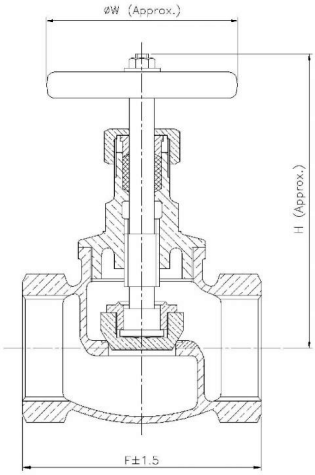

Notes
1. Product images are for illustration purposes only. Actual product may vary.
2. Actual dimensions may change over time, due to continual design improvements. Please confirm before placing order.

Sant Valves Pvt. Ltd.
G.T.Road Bye Pass,
Jalandhar – 144012. Punjab. INDIA

https://www.santvalves.com

Phone : +91 181 5084693
Fax: +91 181 5062270
Email : info@santvalves.com

SANT VALVES
SINCE 1953

ISO 9001 CERTIFIED COMPANY

IS-10 Bronze Globe Valve Rising Stem, Flanged, IS : 778 Class-1 (ISI Marked)

Product Description

HSN 84818030

Product : ‘SANT’ Bronze Globe Valve
Product Standard : IS-778
Pressure/Class/Rating : Class-1
Body Material cum Standard : GM (IS:318 Gr.LTB2)
Description : Screwed in Bonnet, Inside Screw, Rising Stem
Type of Seat : Integral seat
Trim : Cu-Alloy
Gland Packing : PTFE
End Details : Flanges as per IS:778 Class-1 F.F. undrilled

Testing & Certification

Body Test Pressure : 1.5 MPa Hyd.
Seat & Back Seat Test Pressure : 1.0 MPa Hyd.
Max Working Temperature: 45°C

Our Works’ Test Certificate is furnished with every supply.

Application

Water	Oil

Materials of Construction

Components	Materials	Specifications
Body, Bonnet, Disc, Stuffing Box, Gland & Gland Nut, Disc Nut	Leaded Tin Bronze	IS:318 Gr.LTB2
Stem	Forged Brass	IS:6912 Gr.FLB
Handwheel	Cast Iron / Steel	IS:210 Gr.FG200
Gland Packing	PTFE	—-
Screw & Washer for Handwheel	Mild Steel	—-

Dimensions (in mm)

Nominal Size	Nominal Size (Inches)	F	H (Approx.)	ØW (Approx.)
15	1/2	75±1.5	85	60
20	3/4	85±1.5	90	60
25	1	95±1.5	115	65
32	1.1/4	110±1.5	120	75
40	1.1/2	120±1.5	130	90
50	2	145±1.5	135	90
65	2.1/2	165±1.5	170	140
80	3	185±1.5	200	175
100	4	216±1.5	230	200

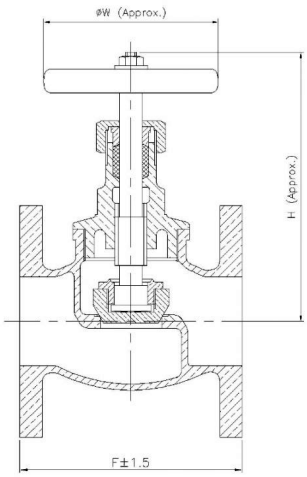

Notes
1. Product images are for illustration purposes only. Actual product may vary.
2. Actual dimensions may change over time, due to continual design improvements. Please confirm before placing order.

Sant Valves Pvt. Ltd.
G.T.Road Bye Pass,
Jalandhar – 144012. Punjab. INDIA
https://www.santvalves.com
Phone : +91 181 5084693
Fax: +91 181 5062270
Email : info@santvalves.com

SANT VALVES
SINCE 1953

I.B.R LISTED FM APPROVED

ISO 9001 CERTIFIED COMPANY

IS-11 Bronze Globe Valve Rising Stem, Screwed, IS : 778 Class-2 (ISI Marked)

Product Description

HSN 84818030

Product : 'SANT' Bronze Globe Valve
Product Standard : IS-778
Pressure/Class/Rating : Class-2
Body Material cum Standard : GM (IS:318 Gr.LTB2)
Description : Screwed in Bonnet, Inside Screw, Rising Stem
Type of Seat : Integral seat
Trim : Cu-Alloy
Gland Packing : PTFE
End Details : Screwed female threads to IS:554 Parallel

Testing & Certification

Body Test Pressure : 2.4 MPa Hyd.
Seat & Back Seat Test Pressure : 1.6 MPa Hyd.
Max Working Temperature: 45°C

Our Works' Test Certificate is furnished with every supply.

Application

Water	Oil

Materials of Construction

Components	Materials	Specifications
Body, Bonnet, Disc, Gland & Gland Nut, Disc Nut	Leaded Tin Bronze	IS:318 Gr.LTB2
Stem	Forged Brass	IS:6912 Gr.FLB
Handwheel	Cast Iron / Steel	IS:210 Gr.FG200
Gland Packing	PTFE	—
Screw & Washer for Handwheel	Mild Steel	—

Dimensions (in mm)

Nominal Size	Nominal Size (Inches)	F	H (Approx.)	ØW (Approx.)
8	1/4	47±1.5	75	50
10	3/8	50±1.5	75	50
15	1/2	60±1.5	85	60
20	3/4	70±1.5	90	60
25	1	80±1.5	115	65
32	1.1/4	95±1.5	120	75
40	1.1/2	110±1.5	130	90
50	2	125±1.5	135	90
65	2.1/2	160±1.5	175	140
80	3	180±1.5	200	175
100	4	216±1.5	230	200

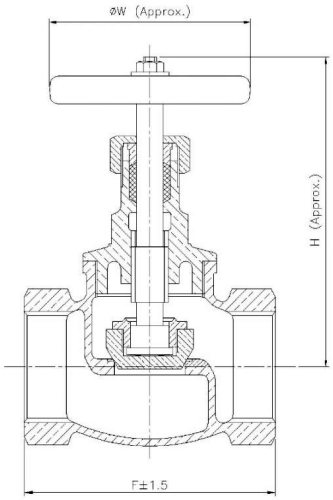

Notes
1. Product images are for illustration purposes only. Actual product may vary.
2. Actual dimensions may change over time, due to continual design improvements. Please confirm before placing order.

Sant Valves Pvt. Ltd.
G.T.Road Bye Pass,
Jalandhar – 144012. Punjab. INDIA

https://www.santvalves.com

Phone : +91 181 5084693
Fax: +91 181 5062270
Email : info@santvalves.com

SANT VALVES
SINCE 1953

I.B.R | ISI | UL LISTED | FM APPROVED

ISO 9001 CERTIFIED COMPANY

IS-12 Bronze Globe Valve Rising Stem, Flanged, IS : 778 Class-2 (ISI Marked)

Product Description

HSN 84818030

Product : ‘SANT’ Bronze Globe Valve
Product Standard : IS-778
Pressure/Class/Rating : Class-2
Body Material cum Standard : GM (IS:318 Gr.LTB2)
Description : Screwed in Bonnet, Inside Screw, Rising Stem
Type of Seat : Integral seat
Trim : Cu-Alloy
Gland Packing : PTFE
End Details : Flanges as per IS:778 Class-2 F.F. undrilled

Testing & Certification

Body Test Pressure : 2.4 MPa Hyd.
Seat & Back Seat Test Pressure : 1.6 MPa Hyd.
Max Working Temperature: 45°C

Our Works’ Test Certificate is furnished with every supply.

Application

Water	Oil

Materials of Construction

Components	Materials	Specifications
Body, Bonnet, Disc, Gland & Gland Nut, Disc Nut	Leaded Tin Bronze	IS:318 Gr.LTB2
Stem	Forged Brass	IS:6912 Gr.FLB
Handwheel	Cast Iron / Steel	IS:210 Gr.FG200
Gland Packing	PTFE	—
Screw & Washer for Handwheel	Mild Steel	—

Dimensions (in mm)

Nominal Size	Nominal Size (Inches)	F	H (Approx.)	ØW (Approx.)
15	1/2	75±1.5	85	60
20	3/4	85±1.5	95	60
25	1	95±1.5	115	65
32	1.1/4	110±1.5	120	75
40	1.1/2	120±1.5	130	90
50	2	145±1.5	135	90
65	2.1/2	165±1.5	170	140
80	3	185±1.5	200	175
100	4	216±1.5	230	200

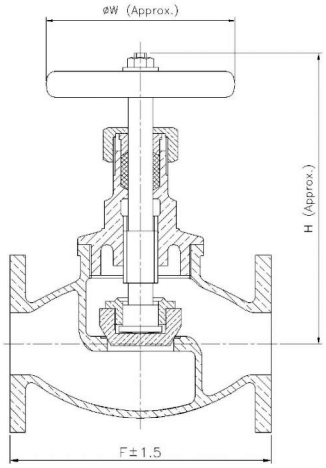

Notes
1. Product images are for illustration purposes only. Actual product may vary.
2. Actual dimensions may change over time, due to continual design improvements. Please confirm before placing order.

Sant Valves Pvt. Ltd.
G.T.Road Bye Pass,
Jalandhar – 144012. Punjab. INDIA

https://www.santvalves.com

Phone : +91 181 5084693
Fax: +91 181 5062270
Email : info@santvalves.com

SANT VALVES
SINCE 1953

ISO 9001 CERTIFIED COMPANY

IS-13 Bronze Globe Valve Rising Stem, Screwed, As Per IS : 778 : 1971 Class-3

Product Description

HSN 84818030

Product : ‘SANT’ Bronze Globe Valve
Product Standard : As Per IS-778:1971
Pressure/Class/Rating : Class-3
Body Material cum Standard : GM (IS:318 Gr.LTB2)
Description : Screwed in Bonnet, Inside Screw, Rising Stem
Type of Seat : Integral seat
Trim : Cu-Alloy
Gland Packing : PTFE
End Details : Screwed female threads to IS:554 Parallel

Photo Not Available

Testing & Certification

Body Test Pressure : 50 Kg/cm2 Hyd.
Seat & Back Seat Test Pressure : 40 Kg/cm2 Hyd.
Max Working Temperature: 45°C

Our Works’ Test Certificate is furnished with every supply.

Application

Water	Oil

Materials of Construction

Components	Materials	Specifications
Body, Bonnet, Disc, Gland & Gland Nut, Disc Nut	Leaded Tin Bronze	IS:318 Gr.LTB2
Stem	Forged Brass	IS:6912 Gr.FLB
Handwheel	Cast Iron / Steel	IS:210 Gr.FG200
Gland Packing	PTFE	—
Screw & Washer for Handwheel	Mild Steel	—

Dimensions (in mm)

Nominal Size	Nominal Size (Inches)	F	H (Approx.)	ØW (Approx.)
15	1/2	89±1.5	90	60
20	3/4	100±1.5	110	65
25	1	117±1.5	120	80
32	1.1/4	133±1.5	130	90
40	1.1/2	150±1.5	150	145
50	2	178±1.5	180	175
65	2.1/2	200±1.5	210	195
80	3	250±1.5	226	195
100	4	300±1.5	250	230

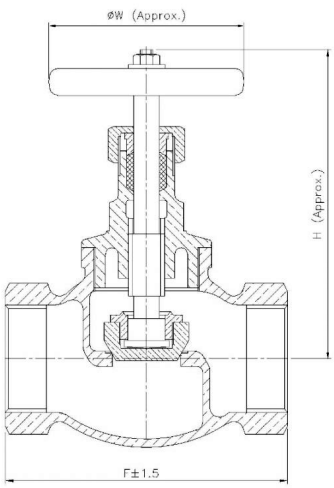

Notes
1. Product images are for illustration purposes only. Actual product may vary.
2. Actual dimensions may change over time, due to continual design improvements. Please confirm before placing order.

Sant Valves Pvt. Ltd.
G.T.Road Bye Pass,
Jalandhar – 144012. Punjab. INDIA
https://www.santvalves.com
Phone : +91 181 5084693
Fax: +91 181 5062270
Email : info@santvalves.com

SANT VALVES
SINCE 1953

ISO 9001 CERTIFIED COMPANY

IS-14A Bronze Horizontal Lift Check Valve Screwed, IS : 778 Class-2 (ISI Marked)

Product Description

HSN 84813000

Product : ‘SANT’ Bronze Horizontal Lift Check Valve
Product Standard : IS-778
Pressure/Class/Rating : Class-2
Body Material cum Standard : GM (IS:318 Gr.LTB2)
Description : Screwed in Cover
Type of Seat : Integral seat
Trim : Cu-Alloy
End Details : Screwed female threads to IS:554 Parallel

Testing & Certification

Body Test Pressure : 2.4 MPa Hyd.
Seat Test Pressure : 1.6 MPa Hyd.
Max Working Temperature: 45°C

Our Works’ Test Certificate is furnished with every supply.

Application

Water	Oil

Materials of Construction

Components	Materials	Specifications
Body, Bonnet & Valve Disc	Leaded Tin Bronze	IS:318 Gr.LTB2

Dimensions (in mm)

Nominal Size	Nominal Size (Inches)	F	H (Approx.)
15	1/2	60±1.5	36
20	3/4	70±1.5	40
25	1	80±1.5	51
32	1.1/4	95±1.5	60
40	1.1/2	110±1.5	70
50	2	125±1.5	75
65	2.1/2	160±1.5	90
80	3	180±1.5	102
100	4	216±1.5	125

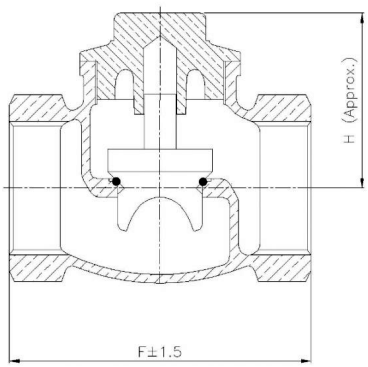

Notes
1. Product images are for illustration purposes only. Actual product may vary.
2. Actual dimensions may change over time, due to continual design improvements. Please confirm before placing order.

Sant Valves Pvt. Ltd.
G.T.Road Bye Pass,
Jalandhar – 144012. Punjab. INDIA
https://www.santvalves.com
Phone : +91 181 5084693
Fax: +91 181 5062270
Email : info@santvalves.com

SANT VALVES
SINCE 1953

ISO 9001 CERTIFIED COMPANY

IS-14 Bronze Horizontal Lift Check Valve Screwed, IS : 778 Class-1 (ISI Marked)

Product Description

HSN 84813000

Product : ‘SANT’ Bronze Horizontal Lift Check Valve
Product Standard : IS-778
Pressure/Class/Rating : Class-1
Body Material cum Standard : GM (IS:318 Gr.LTB2)
Description : Screwed in Cover
Type of Seat : Integral seat
Trim : Cu-Alloy
End Details : Screwed female threads to IS:554 Parallel

Testing & Certification

Body Test Pressure : 1.5 MPa Hyd.
Seat Test Pressure : 1.0 MPa Hyd.
Max Working Temperature: 45°C

Our Works’ Test Certificate is furnished with every supply.

Application

Water	Oil

Materials of Construction

Components	Materials	Specifications
Body, Bonnet & Valve Disc	Leaded Tin Bronze	IS:318 Gr.LTB2
O” – Ring	Rubber	NBR

Dimensions (in mm)

Nominal Size	Nominal Size (Inches)	F	H (Approx.)
15	1/2	60±1.5	36
20	3/4	70±1.5	40
25	1	80±1.5	51
32	1.1/4	95±1.5	60
40	1.1/2	110±1.5	70
50	2	125±1.5	75
65	2.1/2	160±1.5	90
80	3	180±1.5	102
100	4	216±1.5	125

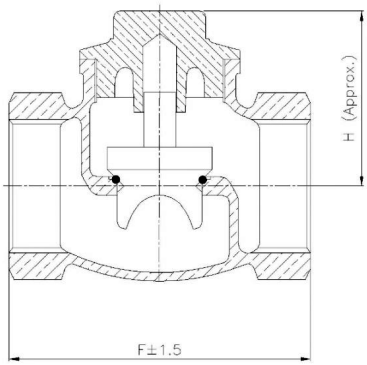

Notes
1. Product images are for illustration purposes only. Actual product may vary.
2. Actual dimensions may change over time, due to continual design improvements. Please confirm before placing order.

Sant Valves Pvt. Ltd.
G.T.Road Bye Pass,
Jalandhar – 144012. Punjab. INDIA
https://www.santvalves.com
Phone : +91 181 5084693
Fax: +91 181 5062270
Email : info@santvalves.com

SANT VALVES
SINCE 1953

ISO 9001 CERTIFIED COMPANY

IS-15A Bronze Horizontal Lift Check Valve Flanged, IS : 778 Class-2 (ISI Marked)

Product Description

HSN 84813000

Product : ‘SANT’ Bronze Horizontal Lift Check Valve
Product Standard : IS-778
Pressure/Class/Rating : Class-2
Body Material cum Standard : GM (IS:318 Gr.LTB2)
Description : Screwed in Cover
Type of Seat : Integral seat
Trim : Cu-Alloy
End Details : Flanges as per IS:778 Class-2 F.F. undrilled

Photo Not Available

Testing & Certification

Body Test Pressure : 2.4 MPa Hyd.
Seat Test Pressure : 1.6 MPa Hyd.
Max Working Temperature: 45°C

Our Works’ Test Certificate is furnished with every supply.

Application

Water	Oil

Materials of Construction

Components	Materials	Specifications
Body, Bonnet & Valve Disc	Leaded Tin Bronze	IS:318 Gr.LTB2

Dimensions (in mm)

Nominal Size	Nominal Size (Inches)	F	H (Approx.)
15	1/2	75±1.5	36
20	3/4	85±1.5	40
25	1	95±1.5	51
32	1.1/4	110±1.5	60
40	1.1/2	120±1.5	70
50	2	145±1.5	75
65	2.1/2	165±1.5	90
80	3	185±1.5	102
100	4	216±1.5	125

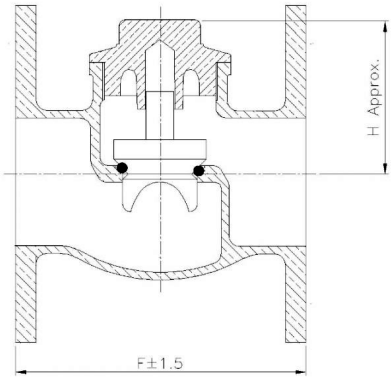

Notes
1. Product images are for illustration purposes only. Actual product may vary.
2. Actual dimensions may change over time, due to continual design improvements. Please confirm before placing order.

Sant Valves Pvt. Ltd.
G.T.Road Bye Pass,
Jalandhar – 144012. Punjab. INDIA
https://www.santvalves.com
Phone : +91 181 5084693
Fax: +91 181 5062270
Email : info@santvalves.com

SANT VALVES
SINCE 1953

ISO 9001 CERTIFIED COMPANY

IS-15 Bronze Horizontal Lift Check Valve Flanged, IS : 778 Class-1 (ISI Marked)

Product Description

HSN 84813000

Product : ‘SANT’ Bronze Horizontal Lift Check Valve
Product Standard : IS-778
Pressure/Class/Rating : Class-1
Body Material cum Standard : GM (IS:318 Gr.LTB2)
Description : Screwed in Cover
Type of Seat : Integral seat
Trim : Cu-Alloy
End Details : Flanges as per IS:778 Class-1 F.F. undrilled

Testing & Certification

Body Test Pressure : 1.5 MPa Hyd.
Seat Test Pressure : 1.0 MPa Hyd.
Max Working Temperature: 45°C

Our Works’ Test Certificate is furnished with every supply.

Application

Water	Oil

Materials of Construction

Components	Materials	Specifications
Body, Bonnet & Valve Disc	Leaded Tin Bronze	IS:318 Gr.LTB2
O” – Ring	Rubber	NBR

Dimensions (in mm)

Nominal Size	Nominal Size (Inches)	F	H (Approx.)
15	1/2	75±1.5	36
20	3/4	85±1.5	40
25	1	95±1.5	51
32	1.1/4	110±1.5	60
40	1.1/2	120±1.5	70
50	2	145±1.5	75
65	2.1/2	165±1.5	90
80	3	185±1.5	102
100	4	216±1.5	125

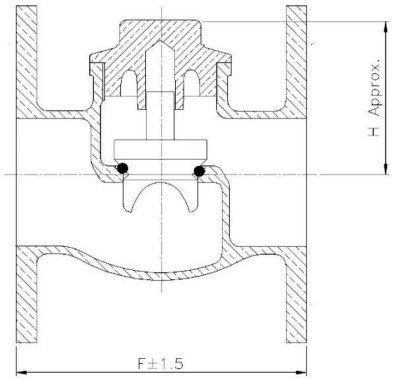

Notes
1. Product images are for illustration purposes only. Actual product may vary.
2. Actual dimensions may change over time, due to continual design improvements. Please confirm before placing order.

Sant Valves Pvt. Ltd.
G.T.Road Bye Pass,
Jalandhar – 144012. Punjab. INDIA
https://www.santvalves.com
Phone : +91 181 5084693
Fax: +91 181 5062270
Email : info@santvalves.com

SANT VALVES
SINCE 1953

ISO 9001 CERTIFIED COMPANY

IS-16 Bronze Swing Check Valve Screwed, IS : 778 Class-1 (ISI Marked)

Product Description

HSN 84813000

Product : ‘SANT’ Bronze Swing Check Valve
Product Standard : IS-778
Pressure/Class/Rating : Class-1
Body Material cum Standard : GM (IS:318 Gr.LTB2)
Description : Screwed in Cover
Type of Seat : Integral seat
Trim : Cu-Alloy
End Details : Screwed female threads to IS:554 Parallel

Testing & Certification

Body Test Pressure : 1.5 MPa Hyd.
Seat Test Pressure : 1.0 MPa Hyd.
Max Working Temperature: 45°C

Our Works’ Test Certificate is furnished with every supply.

Application

Water	Oil

Materials of Construction

Components	Materials	Specifications
Body, Cover & Hinge	Leaded Tin Bronze	IS:318 Gr.LTB2
Hinge Pin, Plug & Nut	Forged Brass	IS:6912 FLB
Disc	Gun Metal (Rubber Faced)	IS:318 Gr.LTB2

Dimensions (in mm)

Nominal Size	Nominal Size (Inches)	F	H (Approx.)
15	1/2	65±1.5	42
20	3/4	75±1.5	50
25	1	95±1.5	63
32	1.1/4	105±1.5	65
40	1.1/2	125±1.5	85
50	2	150±1.5	93

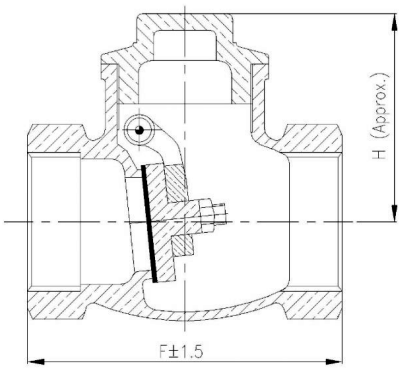

Notes
1. Product images are for illustration purposes only. Actual product may vary.
2. Actual dimensions may change over time, due to continual design improvements. Please confirm before placing order.

Sant Valves Pvt. Ltd.
G.T.Road Bye Pass,
Jalandhar – 144012. Punjab. INDIA
https://www.santvalves.com
Phone : +91 181 5084693
Fax: +91 181 5062270
Email : info@santvalves.com

SANT VALVES
SINCE 1953

ISO 9001 CERTIFIED COMPANY

IS-17 Bronze Ferrule Cock Screwed, IS : 2692

Product Description

HSN 84818020

Product : ‘SANT’ Bronze Ferrule Cock
Product Standard : As per IS:2692
Body Material cum Standard : Bronze (IS:318 Gr.LTB2)
End Details : Screwed male taper to IS:554

Testing & Certification

Body Test Pressure : 1.5 MPa Hyd.
Seat Test Pressure : 1.0 MPa Hyd.

Our Works’ Test Certificate is furnished with every supply.

Application

Water

Photo Not Available

Materials of Construction

Components	Materials	Specifications
Body, Plug & Cap	Leaded Tin Bronze	IS:318 Gr.LTB2
Washer Plate & Nut	High Tensile Brass	IS:319 Type 1 / DCB-2 IS:1264
Rubber Washer	Natural Rubber	—
Copper Washer	Copper / Brass	IS:14811 / IS:410

Dimensions (in mm)

Nominal Size	Nominal Size (Inches)	R (Minimum)	S (Minimum)	T (Minimum)
8	1/4	8	50	55
10	3/8	8.8	50	55
15	1/2	12.3	55	60
20	3/4	17.8	60	65
25	1	24.5	70	75
32	1.1/4	30.8	85	90
40	1.1/2	36.8	95	100
50	2	46.8	115	120

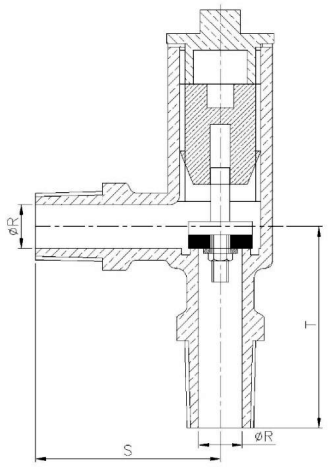

Notes
1. Product images are for illustration purposes only. Actual product may vary.
2. Actual dimensions may change over time, due to continual design improvements. Please confirm before placing order.

Sant Valves Pvt. Ltd.
G.T.Road Bye Pass,
Jalandhar – 144012. Punjab. INDIA
https://www.santvalves.com
Phone : +91 181 5084693
Fax: +91 181 5062270
Email : info@santvalves.com

SANT VALVES
SINCE 1953

ISO 9001 CERTIFIED COMPANY

IS-20 Bronze Ball Valve Screwed

Product Description

HSN 84818030

Product : Sant Bronze Ball Valve
Body Material cum standard : Gun Metal (IS:318 Gr.LTB2)
Product Description : 2 pc design lever operated
Type of Seat : Renewable PTFE Seats
Port Opening : Standard Bore
Trim : Stem SS AISI-410, Ball SS-304/CF8
Gland Packing : PTFE
End Details : Screwed female threads to IS-554 Parallel

Testing & Certification

Body Test Pressure : 500Psig. Hyd.
Seat Test Pressure : 500Psig. Hyd.

Our Works' Test Certificate is furnished with every supply.

Application

Water	Oil

Materials of Construction

Components	Materials	Specifications
Body, Gland	Bronze	IS:318 Gr.LTB2
Ball	Stainless Steel	SS-304/CF8
Stem	Stainless Steel	SS-410
Body Seat & Gland Seals	Teflon	PTFE
Fasteners & Stopper	Mild Steel (Zinc Plated)	—
Lever with PVC Sleeve	Mild Steel	—

Dimensions (in mm)

Nominal Size	Nominal Size (Inches)	F	LL (Approx.)
8	1/4	51±2	102
10	3/8	51±2	102
15	1/2	65±2	102
20	3/4	65±2	112
25	1	77±2	127
32	1.1/4	88±2	150
40	1.1/2	108±2	170
50	2	120±2	170
65	2.1/2	151±2	255
80	3	172±2	255
100	4	215±2	330

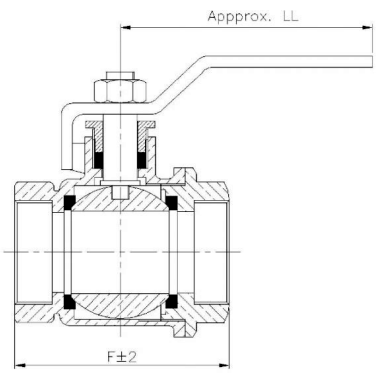

Notes
1. Product images are for illustration purposes only. Actual product may vary.
2. Actual dimensions may change over time, due to continual design improvements. Please confirm before placing order.

Sant Valves Pvt. Ltd.
G.T.Road Bye Pass,
Jalandhar – 144012. Punjab. INDIA

https://www.santvalves.com

Phone : +91 181 5084693
Fax: +91 181 5062270
Email : info@santvalves.com

SANT VALVES
SINCE 1953

ISO 9001 CERTIFIED COMPANY

IS-21 Bronze Foot Valve , Screwed

Product Description

HSN 84813000

Product : Sant Bronze Foot Valve
Body Material cum standard : Gun Metal (IS:318 Gr.LTB2)
Product Description : 2 Piece design with Synthetic rubber O'ring
Type of Seat : Integral seat
End Details : Screwed female threads IS-554 Parallel

Testing & Certification

Test Pressure : 300 Psig. Hyd.

Application

Water

Materials of Construction

Components	Materials	Specifications
Body, Disc	Bronze	IS:318 Gr.LTB2
Nut & Washer	Brass	—
Rubber 'o' Ring	Natural Rubber	
Spring	Phosphorus Bronze	

Dimensions (in mm)

Nominal Size	Nominal Size (Inches)	H (Approx.)
15	1/2	72
20	3/4	72
25	1	78
32	1.1/4	93
40	1.1/2	98
50	2	107
65	2.1/2	112
80	3	127
100	4	141

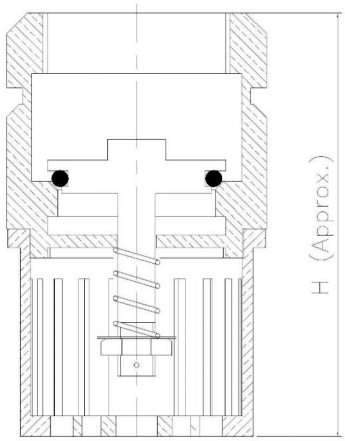

Notes
1. Product images are for illustration purposes only. Actual product may vary.
2. Actual dimensions may change over time, due to continual design improvements. Please confirm before placing order.

Sant Valves Pvt. Ltd.
G.T.Road Bye Pass,
Jalandhar – 144012. Punjab. INDIA
https://www.santvalves.com
Phone : +91 181 5084693
Fax: +91 181 5062270
Email : info@santvalves.com

SANT VALVES
SINCE 1953

I.B.R LISTED FM APPROVED

ISO 9001 CERTIFIED COMPANY

IS-22 Bronze Right Angle Globe Valve No. 4 Rising Stem, Screwed

Product Description

HSN 84818030

Product : Sant Bronze Right Angle Globe Valve No. 4
Type of Pattern : Angle Type
Body Material cum standard : Gun Metal (IS:318 Gr.LTB2)
Product Description : Screwed in bonnet inside screw rising stem
Type of Seat : Integral Seat
Trim : Cu Alloy
Gland Packing : PTFE
End Details : Screwed female threads BSP (Parallel)

Testing & Certification

Body Test Pressure : 300 Psig. Hyd.
Seat Test Pressure : 200 Psig. Hyd.

Materials of Construction

Components	Materials	Specifications
Body, Bonnet, Disc, Disc Nut, Gland & Gland Nut	Leaded Tin Bronze	IS:318 Gr.LTB2
Stem	Forged Brass	IS:6912 Gr.FLB
Handwheel	Cast Iron / Steel	IS:210 Gr.FG200
Gland Packing	PTFE	
Screw & Washer for Handwheel	Mild Steel	

Dimensions (in mm)

Nominal Size	Nominal Size (Inches)	F	H (Approx.)	ØW (Approx.)
15	1/2	28±1.5	80	60
20	3/4	38±1.5	95	60
25	1	47±1.5	110	65
32	1.1/4	52±1.5	110	80
40	1.1/2	56±1.5	130	80
50	2	62±1.5	130	100
65	2.1/2	80±1.5	160	140
80	3	90±1.5	185	175
100	4	110±1.5	210	200

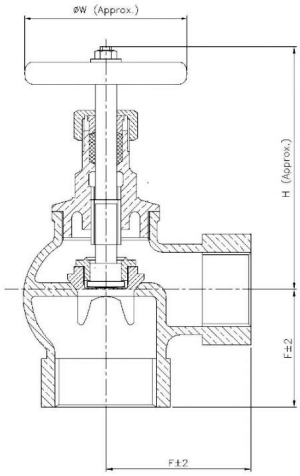

Notes
1. Product images are for illustration purposes only. Actual product may vary.
2. Actual dimensions may change over time, due to continual design improvements. Please confirm before placing order.

Sant Valves Pvt. Ltd.
G.T.Road Bye Pass,
Jalandhar – 144012. Punjab. INDIA
https://www.santvalves.com
Phone : +91 181 5084693
Fax: +91 181 5062270
Email : info@santvalves.com

SANT VALVES
SINCE 1953

ISO 9001 CERTIFIED COMPANY

IS-23 Bronze Right Angle Lift Check Valve , Screwed

Product Description

HSN 84813000

Product : Sant Bronze Right Angle Lift Check Valve
Type of Pattern : Angle Type
Body Material cum standard : Gun Metal (IS:318 Gr.LTB2)
Product Description : Screwed in Cover
Type of Seat : Integral Seat
Trim : Cu Alloy
End Details : Screwed female threads BSP (Parallel)

Testing & Certification

Body Test Pressure : 300 Psig. Hyd.
Seat Test Pressure : 200 Psig. Hyd.

Application

Water	Oil

Materials of Construction

Components	Materials	Specifications
Body, Bonnet and Valve Disc	Leaded Tin Bronze	IS:318 Gr.LTB2
O" – Ring	Rubber	NBR

Dimensions (in mm)

Nominal Size	Nominal Size (Inches)	F	H (Approx.)
15	1/2	28±1.5	35
20	3/4	38±1.5	43
25	1	47±1.5	55
32	1.1/4	52±1.5	60
40	1.1/2	56±1.5	66
50	2	62±1.5	75
65	2.1/2	80±1.5	88
80	3	90±1.5	100
100	4	110±1.5	115

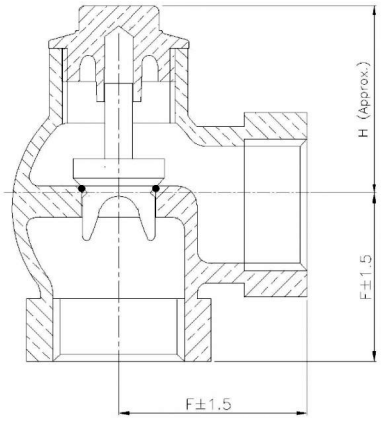

Notes
1. Product images are for illustration purposes only. Actual product may vary.
2. Actual dimensions may change over time, due to continual design improvements. Please confirm before placing order.

Sant Valves Pvt. Ltd.
G.T.Road Bye Pass,
Jalandhar – 144012. Punjab. INDIA
https://www.santvalves.com
Phone : +91 181 5084693
Fax: +91 181 5062270
Email : info@santvalves.com

SANT VALVES
SINCE 1953

ISO 9001 CERTIFIED COMPANY

IS-31 Bronze Gate Valve OS & Yoke Type, Rising Stem, Screwed, IS : 778 Class-1

Product Description

HSN 84818030

Product : Sant Bronze Gate Valve
Product Standard : As per IS-778
Pressure/Class/Rating : Class-1
Body Material cum standard : Gun Metal (IS:318 Gr.LTB2)
Product Description : Screwed In Bonnet, outside screw & Yoke Type, Rising Stem
Type of Seat : Integral Seat
Type of Wedge : Solid Wedge
Trim : Cu-Alloy
Gland Packing : PTFE
End Details : Screwed female threads to IS-554 Parallel

Testing & Certification

Body Test Pressure : 1.5MPa Hyd.
Seat Test Presuure : 1.0MPa Hyd.

Application

Water	Oil

Materials of Construction

Components	Materials	Specifications
Body, Bonnet, Wedge, Gland & Gland Nut	Leaded Tin Bronze	IS:318 Gr.LTB2
Stem	Forged Brass	IS:6912 Gr.FLB
Handwheel	Cast Iron / Steel	IS:210 Gr.FG200
Gland Packing	PTFE	
Screw & Washer for Handwheel	Mild Steel	

Dimensions (in mm)

Nominal Size	Nominal Size (Inches)	F	H (Approx.)	ØW (Approx.)
15	1/2	60±1.5	138	60
20	3/4	60±1.5	155	60
25	1	70±1.5	165	65
32	1.1/4	80±1.5	195	75
40	1.1/2	90±1.5	240	80
50	2	100±1.5	270	100
65	2.1/2	105±1.5	310	105
80	3	125±1.5	380	115
100	4	160±1.5	475	200

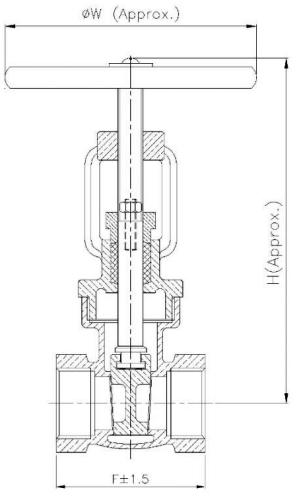

Notes
1. Product images are for illustration purposes only. Actual product may vary.
2. Actual dimensions may change over time, due to continual design improvements. Please confirm before placing order.

Sant Valves Pvt. Ltd.
G.T.Road Bye Pass,
Jalandhar – 144012. Punjab. INDIA
https://www.santvalves.com
Phone : +91 181 5084693
Fax: +91 181 5062270
Email : info@santvalves.com

SANT VALVES
SINCE 1953

I.B.R LISTED FM APPROVED

ISO 9001 CERTIFIED COMPANY

IS-33 Bronze Gate Valve OS & Yoke Type, Rising Stem, Screwed, IS : 778 Class-2

Product Description

HSN 84818030

Product : Sant Bronze Gate Valve
Product Standard : As per IS-778
Pressure/Class/Rating : Class-2
Body Material cum standard : Gun Metal (IS:318 Gr.LTB2)
Product Description : Screwed In Bonnet, outside screw & Yoke Type, Rising Stem
Type of Seat : Integral Seat
Type of Wedge : Solid Wedge
Trim : Cu-Alloy
Gland Packing : PTFE
End Details : Screwed female threads to IS-554 Parallel

Testing & Certification

Body Test Pressure : 2.4MPa Hyd.
Seat Test Presuure : 1.6MPa Hyd.

Application

Water	Oil

Materials of Construction

Components	Materials	Specifications
Body, Bonnet, Wedge, Gland & Gland Nut	Leaded Tin Bronze	IS:318 Gr.LTB2
Stem	Forged Brass	IS:6912 FLB
Handwheel	Cast Iron / Steel	IS:210 Gr.FG200
Gland Packing	PTFE	
Screw & Washer for Handwheel	Mild Steel	

Dimensions (in mm)

Nominal Size	Nominal Size (Inches)	F	H (Approx.)	ØW (Approx.)
15	1/2	60±1.5	138	60
20	3/4	60±1.5	155	60
25	1	70±1.5	165	65
32	1.1/4	80±1.5	195	75
40	1.1/2	90±1.5	240	80
50	2	100±1.5	270	100
65	2.1/2	105±1.5	310	105
80	3	125±1.5	380	115
100	4	160±1.5	475	200

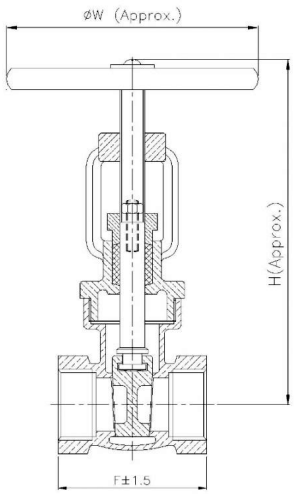

Notes
1. Product images are for illustration purposes only. Actual product may vary.
2. Actual dimensions may change over time, due to continual design improvements. Please confirm before placing order.

Sant Valves Pvt. Ltd.
G.T.Road Bye Pass,
Jalandhar – 144012. Punjab. INDIA
https://www.santvalves.com
Phone : +91 181 5084693
Fax: +91 181 5062270
Email : info@santvalves.com

SANT VALVES
SINCE 1953

ISO 9001 CERTIFIED COMPANY

IS-34A Bronze Globe Valve OS & Yoke Type, Rising Stem , Screwed, IS : 778 Class-2

Product Description

HSN 84818030

Product : Sant Bronze Globe Valve
Product Standard : As per IS-778
Pressure/Class/Rating : Class-2
Body Material cum standard : Leaded Tin Bronze (IS:318 Gr.LTB2)
Product Description : Screwed In Bonnet, Outside Screw & Yoke Type, Rising Stem
Type of Seat : Integral Seat
Trim : Cu-Alloy
Gland Packing : PTFE
End Details : Screwed female threads to IS-554 Parallel

Testing & Certification

Body Test Pressure : 2.4MPa Hyd.
Seat Test Presuure : 1.6MPa Hyd.

Application

Water	Oil

Materials of Construction

Components	Materials	Specifications
Body, Bonnet, Disc, Gland & Disc Nut	Leaded Tin Bronze	IS:318 Gr.LTB2
Stem	Forged Brass	IS:6912 Gr.FLB
Handwheel	Cast Iron	IS:210 Gr.FG200
Gland Packing	PTFE	
Screw, Washer, Gland Stud & Nuts	Mild Steel	

Dimensions (in mm)

Nominal Size	Nominal Size (Inches)	F	H (Approx.)	ØW (Approx.)
15	1/2	60±1.5	110	60
20	3/4	70±1.5	120	60
25	1	80±1.5	135	65
32	1.1/4	95±1.5	150	75
40	1.1/2	110±1.5	165	80
50	2	125±1.5	180	90

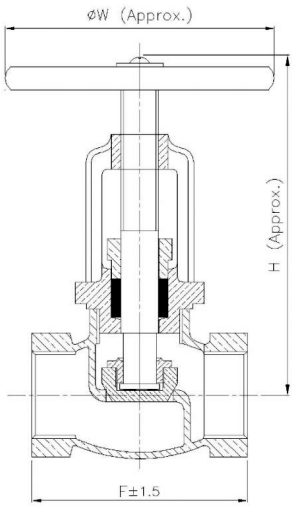

Notes
1. Product images are for illustration purposes only. Actual product may vary.
2. Actual dimensions may change over time, due to continual design improvements. Please confirm before placing order.

Sant Valves Pvt. Ltd.
G.T.Road Bye Pass,
Jalandhar – 144012. Punjab. INDIA
https://www.santvalves.com
Phone : +91 181 5084693
Fax: +91 181 5062270
Email : info@santvalves.com

SANT VALVES
SINCE 1953

ISO 9001 CERTIFIED COMPANY

IS-34 Bronze Globe Valve OS & Yoke Type, Rising Stem, Screwed, IS : 778 Class-1

Product Description

HSN 84818030

Product : Sant Bronze Globe Valve
Product Standard : As per IS-778
Pressure/Class/Rating : Class-1
Body Material cum standard : Bronze (IS:318 Gr.LTB2)
Product Description : Screwed In Bonnet, Outside Screw & Yoke Type, Rising Stem
Type of Seat : Integral Seat
Trim : Cu-Alloy
Gland Packing : PTFE
End Details : Screwed female threads to IS-554 Parallel

Testing & Certification

Body Test Pressure : 1.5MPa Hyd.
Seat Test Presuure : 1.0MPa Hyd.

Application

Water	Oil

Materials of Construction

Components	Materials	Specifications
Body, Bonnet, Disc, Gland & Disc Nut	Leaded Tin Bronze	IS:318 Gr.LTB2
Stem	Forged Brass	IS:6912 Gr.FLB
Handwheel	Cast Iron	IS:210 Gr.FG200
Gland Packing	PTFE	
Screw, Washer, Gland Stud & Nuts	Mild Steel	

Dimensions (in mm)

Nominal Size	Nominal Size (Inches)	F	H (Approx.)	ØW (Approx.)
15	1/2	60±1.5	110	60
20	3/4	70±1.5	120	60
25	1	80±1.5	135	65
32	1.1/4	95±1.5	150	75
40	1.1/2	110±1.5	165	80
50	2	125±1.5	180	90

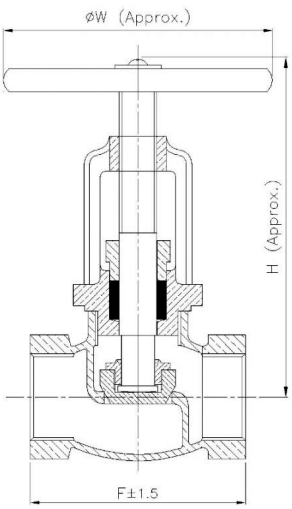

Notes
1. Product images are for illustration purposes only. Actual product may vary.
2. Actual dimensions may change over time, due to continual design improvements. Please confirm before placing order.

Sant Valves Pvt. Ltd.
G.T.Road Bye Pass,
Jalandhar – 144012. Punjab. INDIA
https://www.santvalves.com
Phone : +91 181 5084693
Fax: +91 181 5062270
Email : info@santvalves.com

SANT VALVES
SINCE 1953

ISO 9001 CERTIFIED COMPANY

IS-35A Bronze Swing Check Valve Screwed, IS : 778 Class-2

Product Description

HSN 84813030

Product : Sant Bronze Swing Check Valve
Product Standard : As per IS-778
Pressure/Class/Rating : Class-2
Body Material cum Standard : Leaded Tin Bronze (IS:318 Gr.LTB2)
Product Description : Screwed In Cover
Type of Seat : Integral Seat
Trim : Cu-Alloy
End Details : Screwed female threads to IS-554 Parallel

Testing & Certification

Body Test Pressure : 2.4MPa Hyd.
Seat Test Pressure : 1.6MPa Hyd.

Application

Water	Oil

Materials of Construction

Components	Materials	Specifications
Body, Cover, & Hinge	Leaded Tin Bronze	IS:318 Gr.LTB2
Hinge Pin, Plug	Forged Brass	IS:6912 Gr.FLB
Disc (Rubber Faced)	Gun Metal	IS:318 Gr.LTB2

Dimensions (in mm)

Nominal Size	Nominal Size (Inches)	F	H (Approx.)
15	1/2	65±1.5	45
20	3/4	75±1.5	50
25	1	95±1.5	60
32	1.1/4	105±1.5	65
40	1.1/2	125±1.5	85
50	2	150±1.5	93

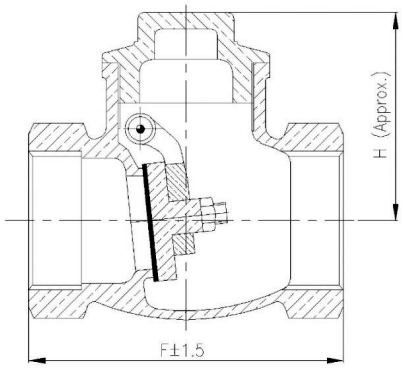

Notes
1. Product images are for illustration purposes only. Actual product may vary.
2. Actual dimensions may change over time, due to continual design improvements. Please confirm before placing order.

Sant Valves Pvt. Ltd.
G.T.Road Bye Pass,
Jalandhar – 144012. Punjab. INDIA
https://www.santvalves.com
Phone : +91 181 5084693
Fax: +91 181 5062270
Email : info@santvalves.com

SANT®
VALVES
SINCE 1953

info@santvalves.com
www.santvalves.com

Sant Valves Pvt. Ltd.
Jalandhar -144012, Punjab. India