SANT VALVES
SINCE 1953

I.B.R
ISO 9001 CERTIFIED COMPANY

IBR-8 Bronze Pressure Gauge Valve (IBR Approved)

Product Description

HSN 84812000

Product : 'SANT' Bronze Pressure Gauge Valve
Body Material cum Standard : Bronze IBR 282(a)(iv) Gr.B
Type of Seat : Plug type
End Details : Screwed female BSP Parallel threads to BS 21.

Testing & Certification

Hydraulic Test Pressure : 500 Psig.Hyd.
Working Pressure : Max.BOP 250 Psig.(17.58Kg/cm²)
Maximum Working Temperature: 225°C (435°F)

Test Certificate in Form lll-C as per IBR is furnished with every supply.

Application

Water	Steam

Materials of Construction

Components	Materials	Specifications
Body, Plug, Coupling Nut, Tail Pipe & Washer	Bronze	IBR 282(a)(iv) Gr.B
Nut	Forged Brass	IS:6912 FLB

Dimensions (in mm)

Nominal Size	Nominal Size (Inches)	F
10	3/8	140±1.5
15	1/2	140±1.5

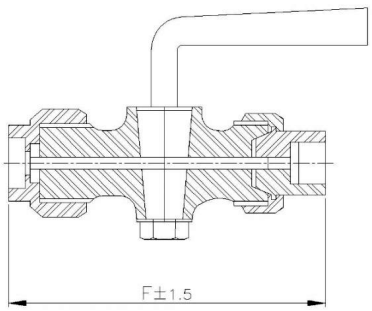

Notes
1. Product images are for illustration purposes only. Actual product may vary.
2. Actual dimensions may change over time, due to continual design improvements. Please confirm before placing order.

Sant Valves Pvt. Ltd.
G.T.Road Bye Pass,
Jalandhar – 144012. Punjab. INDIA

https://www.santvalves.com

Phone : +91 181 5084693
Fax: +91 181 5062270
Email : info@santvalves.com